Cape Club Estates

Sharon, MA

Issued: 02/12/2019

Project Team: Andrew T. Zalewski, A.I.A.
Warren B. Putnam

The MZO Group
Stoneham, MA

List of Drawings

A0 Foundation Plan
A1 Basement Walk-out Plan
A2 First Floor Plan
A3 Second Floor Plan
A4 Roof Plan
A5 Elevations I
A6 Elevations II
A7 Sections I
A8 Sections II
D1 Details
D2 Details
F1 First Floor Framing Plan
F2 Second Floor Framing Plan
F3 Attic Framing Plan
F4 Roof Framing Plan
G1 General Notes

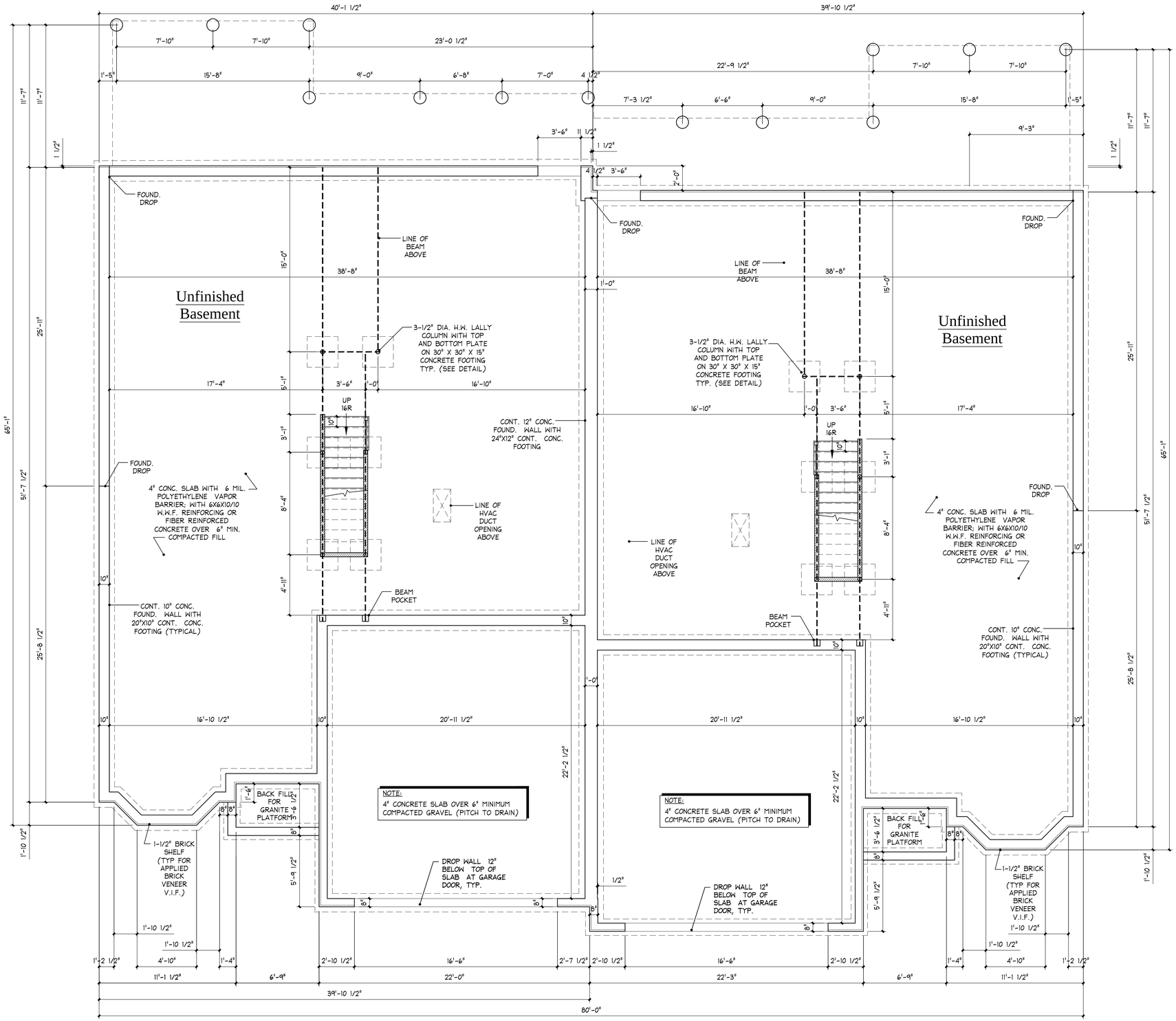

FOUNDATION PLAN

1/4" = 1'-0"

c COPYRIGHT 2019 - M.Z.O. ARCHITECTURAL GROUP, INC. OWNS THE COPYRIGHT IN THIS DOCUMENT. NO REPRODUCTION OR OTHER USE IS ALLOWED WITHOUT THE EXPRESS WRITTEN CONSENT OF M.Z.O. ARCHITECTURAL GROUP, INC.

The MZO GROUP
DESIGNERS ■ ARCHITECTS ■ PLANNERS
IN THE *MAQUELLE* TRADITION
255 Main Street, Suite 201 ■ Stoneham, Massachusetts (02180)
Voice: 781-279-4446 ■ Fax: 781-279-4448 ■ E-Mail: mzo@mzogroup.com ■ www.mzogroup.com

ARCHITECT — MICHAEL Z. ERFBAUM — No. 7292 — STONEHAM, MA — COMMONWEALTH OF MASSACHUSETTS

Cape Club Estates
Sharon, MA

Foundation Plan

SCALE: 1/4"=1'-0"

Date / Drawn by
02/12/19

Date/Revised by

JOB NO. 5916

A0

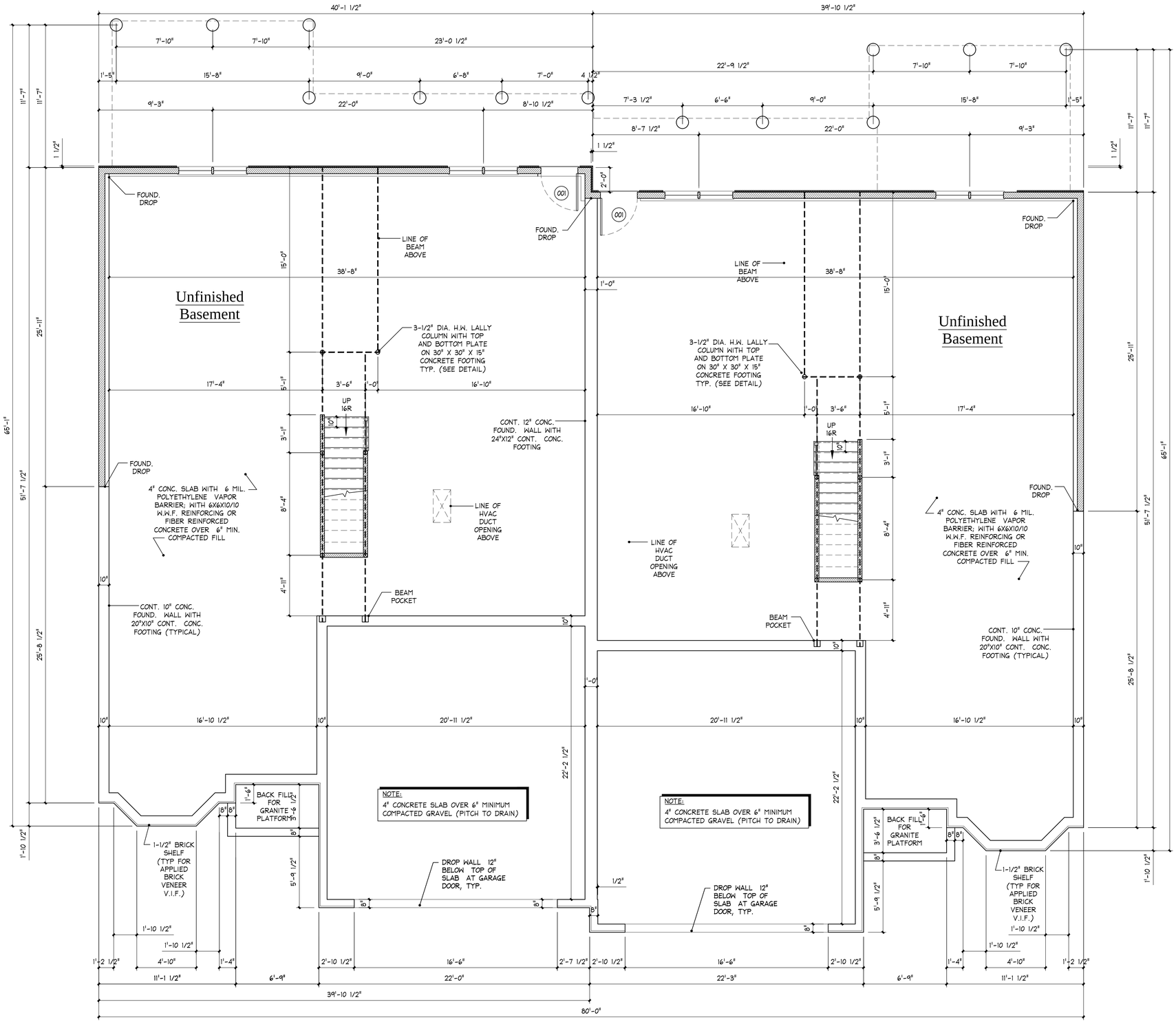

BASEMENT PLAN

1/4" = 1'-0"

DOOR SCHEDULE

DR #	TYPE	MATERIAL	SIZE	THICK	REMARKS
001	SLIDING	VINYL/TEMPERED GLASS	6'-0" X 6'-8"	-	INSULATED
101	HINGED	METAL/INSULATED	3'-0" X 6'-8"	1 3/4"	W/ (2) 12" WIDE SIDELIGHTS
102	POCKET	WOOD	(2) 2'-0" X 6'-8"	1 3/8"	-
103	HINGED	WOOD	2'-8" X 6'-8"	1 3/8"	-
104	HINGED	WOOD	2'-6" X 6'-8"	1 3/8"	-
105	HINGED	WOOD	(2) 2'-0" X 6'-8"	1 3/8"	-
106	HINGED	METAL/INSULATED	2'-8" X 6'-8"	1 3/4"	20 MIN. FIRE RATED W/SELF CLOSING HINGES
107	HINGED	WOOD	2'-10" X 6'-8"	1 3/8"	-
108	HINGED	WOOD	2'-6" X 6'-8"	1 3/8"	-
109	HINGED	WOOD	2'-8" X 6'-8"	1 3/8"	-
110	HINGED	WOOD	2'-6" X 6'-8"	1 3/8"	-
111	HINGED	WOOD	2'-6" X 6'-8"	1 3/8"	-
112	POCKET	WOOD	2'-8" X 6'-8"	1 3/8"	-
113	HINGED	WOOD	2'-6" X 6'-8"	1 3/8"	
114	SLIDER	FIBERGLASS/INSULATED	9'-0" X 7'-0"	1 3/8"	-
115	SLIDER	FIBERGLASS/INSULATED	12'-0" X 7'-0"	1 3/8"	-
201	HINGED	WOOD	2'-8" X 6'-8"	1 3/4"	-
202	HINGED	WOOD	2'-8" X 6'-8"	1 3/8"	-
203	HINGED	WOOD	2'-6" X 6'-8"	1 3/8"	-
204	HINGED	WOOD	(2) 2'-0" X 6'-8"	1 3/8"	-
205	HINGED	WOOD	(2) 2'-0" X 6'-8"	1 3/8"	-
206	HINGED	WOOD	1'-6" X 6'-8"	1 3/8"	-

c COPYRIGHT 2019 - M.Z.O. ARCHITECTURAL GROUP, INC. OWNS THE COPYRIGHT IN THIS DOCUMENT. NO REPRODUCTION OR OTHER USE IS ALLOWED WITHOUT THE EXPRESS WRITTEN CONSENT OF M.Z.O. ARCHITECTURAL GROUP, INC.

The MZO GROUP
DESIGNERS ■ ARCHITECTS ■ PLANNERS
IN THE *MAQUELLE* TRADITION
255 Main Street, Suite 201 ■ Stoneham, Massachusetts (02180)
Voice: 781-279-4446 ■ Fax: 781-279-4448 ■ E-Mail: mzo@mzogroup.com ■ www.mzogroup.com

Cape Club Estates
Sharon, MA

Basement Walk-out Plan

SCALE: 1/4"=1'-0"

Date / Drawn by
02/12/19
Date/Revised by

JOB NO. 5916

A1

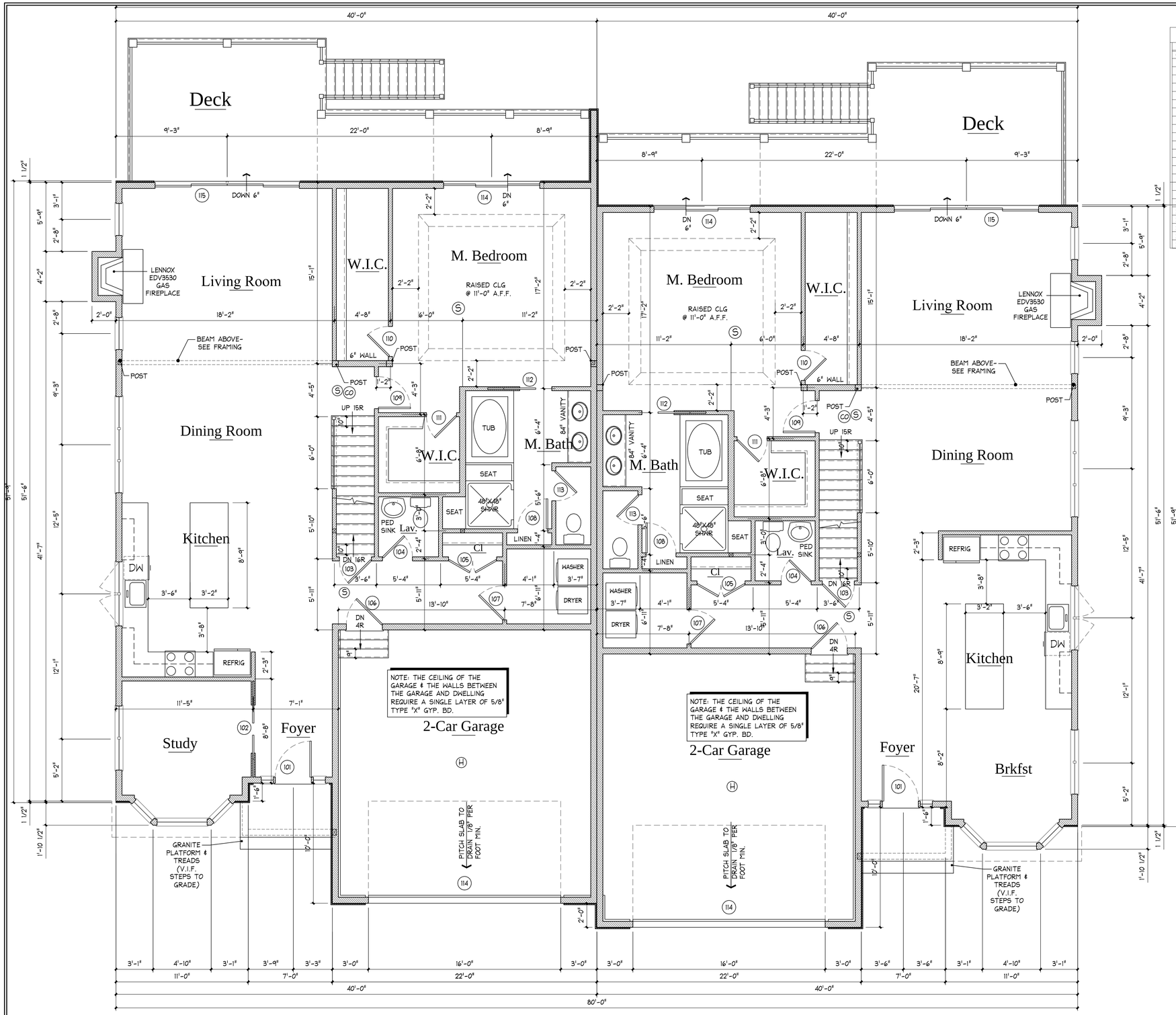

DOOR SCHEDULE

DR #	TYPE	MATERIAL	SIZE	THICK	REMARKS
001	SLIDING	VINYL/TEMPERED GLASS	6'-0" X 6'-8"	-	INSULATED
101	HINGED	METAL/INSULATED	3'-0" X 6'-8"	1 3/4"	W/ (2) 12" WIDE SIDELIGHTS
102	POCKET	WOOD	(2) 2'-0" X 6'-8"	1 3/8"	-
103	HINGED	WOOD	2'-8" X 6'-8"	1 3/8"	
104	HINGED	WOOD	2'-6" X 6'-8"	1 3/8"	-
105	HINGED	WOOD	(2) 2'-0" X 6'-8"	1 3/8"	-
106	HINGED	METAL/INSULATED	2'-8" X 6'-8"	1 3/4"	20 MIN. FIRE RATED W/SELF CLOSING HINGES
107	HINGED	WOOD	2'-10" X 6'-8"	1 3/8"	-
108	HINGED	WOOD	2'-6" X 6'-8"	1 3/8"	-
109	HINGED	WOOD	2'-8" X 6'-8"	1 3/8"	-
110	HINGED	WOOD	2'-6" X 6'-8"	1 3/8"	-
111	HINGED	WOOD	2'-6" X 6'-8"	1 3/8"	-
112	POCKET	WOOD	2'-8" X 6'-8"	1 3/8"	-
113	HINGED	WOOD	2'-6" X 6'-8"	1 3/8"	
114	SLIDER	FIBERGLASS/INSULATED	9'-0" X 7'-0"	1 3/8"	-
115	SLIDER	FIBERGLASS/INSULATED	12'-0" X 7'-0"	1 3/8"	-
201	HINGED	WOOD	2'-8" X 6'-8"	1 3/4"	-
202	HINGED	WOOD	2'-8" X 6'-8"	1 3/8"	-
203	HINGED	WOOD	2'-6" X 6'-8"	1 3/8"	-
204	HINGED	WOOD	(2) 2'-0" X 6'-8"	1 3/8"	-
205	HINGED	WOOD	(2) 2'-0" X 6'-8"	1 3/8"	-
206	HINGED	WOOD	1'-6" X 6'-8"	1 3/8"	-

1,776 SQ. FT. - FIRST FLOOR LIVING AREA
732 SQ. FT. - SECOND FLOOR LIVING AREA
2,508 SQ. FT. - TOTAL FINISHED LIVING AREA

FIRST FLOOR PLAN

1/4" = 1'-0"

c COPYRIGHT 2019 - M.Z.O. ARCHITECTURAL GROUP, INC. OWNS THE COPYRIGHT IN THIS DOCUMENT. NO REPRODUCTION OR OTHER USE IS ALLOWED WITHOUT THE EXPRESS WRITTEN CONSENT OF M.Z.O. ARCHITECTURAL GROUP, INC.

The MZO GROUP
DESIGNERS ■ ARCHITECTS ■ PLANNERS
IN THE *MAQUELLE* TRADITION
255 Main Street, Suite 201 ■ Stoneham, Massachusetts (02180)
Voice: 781-279-4446 ■ Fax: 781-279-4448 ■ E-Mail: mzo@mzogroup.com ■ www.mzogroup.com

ASSOCIATED ARCHITECT ■ ALEXEY BYKOV ■ NO. 22892 ■ STONEHAM, MA ■ COMMONWEALTH OF MASSACHUSETTS

Cape Club Estates
Sharon, MA

First Floor Plan

SCALE: 1/4"=1'-0"

Date / Drawn by
02/12/19
Date/Revised by

JOB NO. 5916

A2

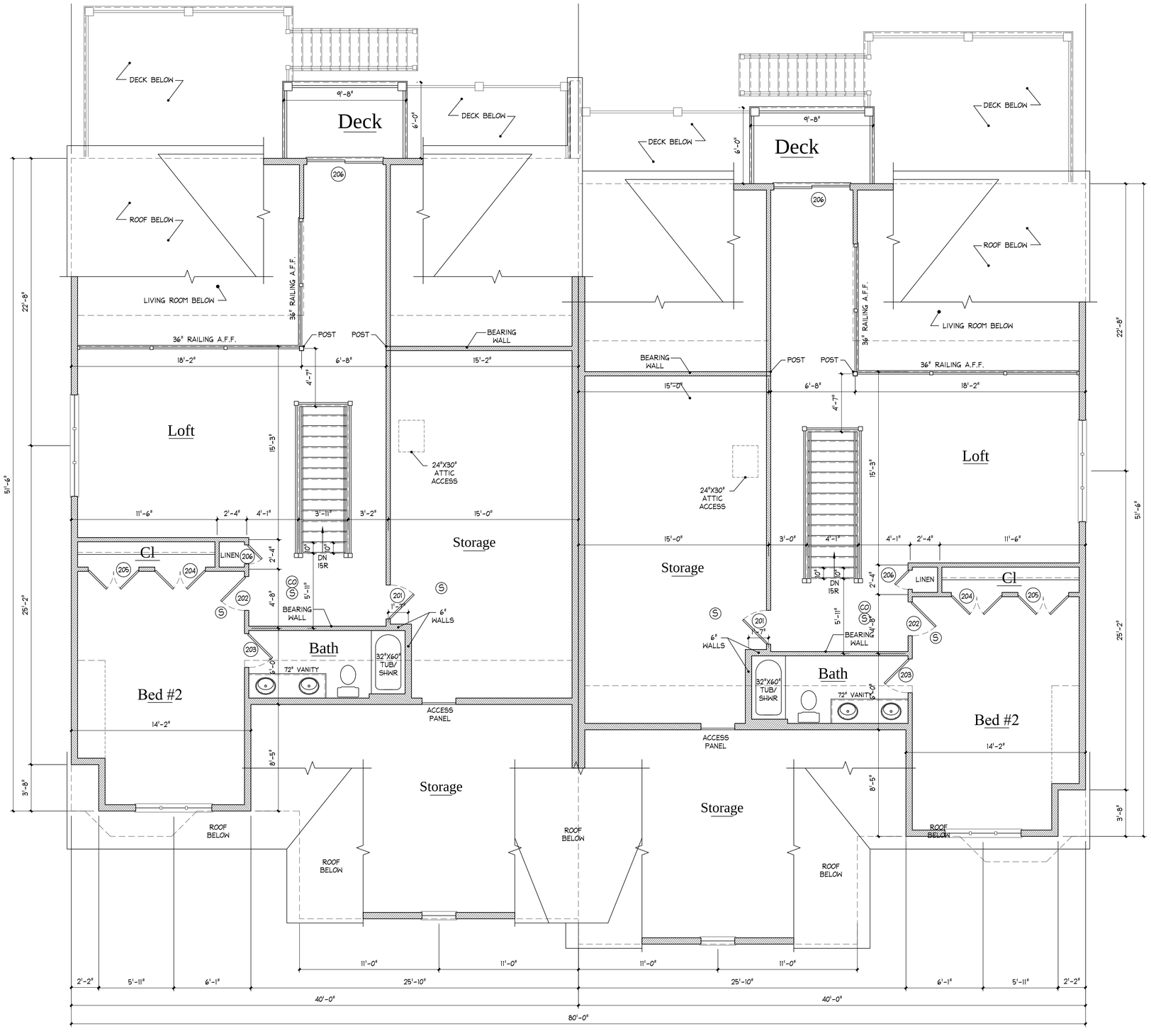

SECOND FLOOR PLAN

1/4" = 1'-0"

DOOR SCHEDULE

DR #	TYPE	MATERIAL	SIZE	THICK	REMARKS
001	SLIDING	VINYL/TEMPERED GLASS	6'-0" X 6'-8"	-	INSULATED
101	HINGED	METAL/INSULATED	3'-0" X 6'-8"	1 3/4"	W/ (2) 12" WIDE SIDELIGHTS
102	POCKET	WOOD	(2) 2'-0" X 6'-8"	1 3/8"	-
103	HINGED	WOOD	2'-8" X 6'-8"	1 3/8"	
104	HINGED	WOOD	2'-6" X 6'-8"	1 3/8"	-
105	HINGED	WOOD	(2) 2'-0" X 6'-8"	1 3/8"	-
106	HINGED	METAL/INSULATED	2'-8" X 6'-8"	1 3/4"	20 MIN. FIRE RATED W/SELF CLOSING HINGES
107	HINGED	WOOD	2'-10" X 6'-8"	1 3/8"	-
108	HINGED	WOOD	2'-6" X 6'-8"	1 3/8"	-
109	HINGED	WOOD	2'-8" X 6'-8"	1 3/8"	-
110	HINGED	WOOD	2'-6" X 6'-8"	1 3/8"	-
111	HINGED	WOOD	2'-6" X 6'-8"	1 3/8"	-
112	POCKET	WOOD	2'-8" X 6'-8"	1 3/8"	-
113	HINGED	WOOD	2'-6" X 6'-8"	1 3/8"	
114	SLIDER	FIBERGLASS/INSULATED	9'-0" X 7'-0"	1 3/8"	-
115	SLIDER	FIBERGLASS/INSULATED	12'-0" X 7'-0"	1 3/8"	-
201	HINGED	WOOD	2'-8" X 6'-8"	1 3/4"	-
202	HINGED	WOOD	2'-8" X 6'-8"	1 3/8"	-
203	HINGED	WOOD	2'-6" X 6'-8"	1 3/8"	-
204	HINGED	WOOD	(2) 2'-0" X 6'-8"	1 3/8"	-
205	HINGED	WOOD	(2) 2'-0" X 6'-8"	1 3/8"	-
206	HINGED	WOOD	1'-6" X 6'-8"	1 3/8"	-

© COPYRIGHT 2019 - M.Z.O. ARCHITECTURAL GROUP, INC. OWNS THE COPYRIGHT IN THIS DOCUMENT. NO REPRODUCTION OR OTHER USE IS ALLOWED WITHOUT THE EXPRESS WRITTEN CONSENT OF M.Z.O. ARCHITECTURAL GROUP, INC.

The MZO GROUP
DESIGNERS ■ ARCHITECTS ■ PLANNERS
IN THE *MAQUELLE* TRADITION
555 Main Street, Suite 201 ■ Stoneham, Massachusetts (02180)
Voice: 781-279-4446 ■ Fax: 781-279-4448 ■ E-Mail: mzo@mzogroup.com ■ www.mzogroup.com

ARCHITECT ■ MICHAEL ZEMBRA ■ NO. 7292 ■ STONEHAM, MA ■ COMMONWEALTH OF MASSACHUSETTS

Cape Club Estates
Sharon, MA

Second Floor Plan

SCALE: 1/4"=1'-0"

Date / Drawn by
02/12/19

Date/Revised by

JOB NO. 5916

A3

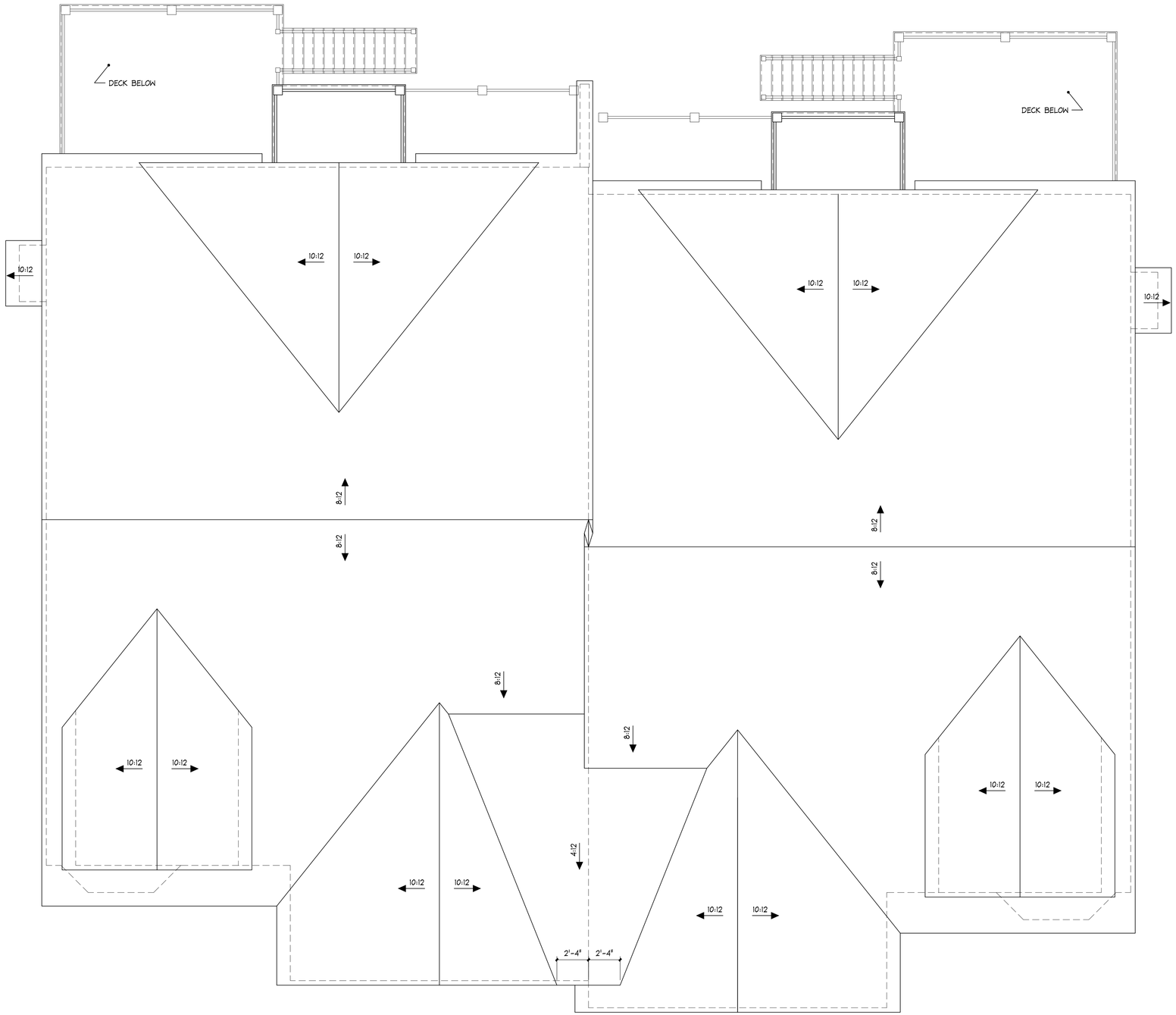

ROOF PLAN

1/4" = 1'-0"

c COPYRIGHT 2019 - M.Z.O. ARCHITECTURAL GROUP, INC. OWNS THE COPYRIGHT IN THIS DOCUMENT. NO REPRODUCTION OR OTHER USE IS ALLOWED WITHOUT THE EXPRESS WRITTEN CONSENT OF M.Z.O. ARCHITECTURAL GROUP, INC.

The MZO GROUP
DESIGNERS ■ ARCHITECTS ■ PLANNERS
IN THE *MAQUELLE* TRADITION
255 Main Street, Suite 201 ■ Stoneham, Massachusetts (02180)
Voice: 781-279-4446 ■ Fax: 781-279-4448 ■ E-Mail: mzo@mzogroup.com ■ www.mzogroup.com

REGISTERED ARCHITECT — ROBERT J. ZEMBKO — NO. 7292 — STONEHAM, MA — COMMONWEALTH OF MASSACHUSETTS

Cape Club Estates
Sharon, MA

Roof Plan

SCALE: 1/4"=1'-0"

Date / Drawn by
02/12/19

Date/Revised by

JOB NO. 5916

A4

UNIT B

FRONT ELEVATION

1/4" = 1'-0"

UNIT A

BASEMENT FLOOR LINE

HARVEY WINDOW ROUGH OPENINGS (WIDTH X HEIGHT)
DH20410 - 26" X 61.5"
PW42410 - 50.5" X 61.5"
DH2836 - 34" X 37.5"
DH2852 - 34" X 65.5"
DH2852-2 - 66.25" X 65.5"
DH2852-3 - 98.75" X 65.5"
DH1846/DH2846/DH1846 - 74.5" X 57.5"
C3636-2 - 41.75 X 42"
PW2923 - 33.5" X 27.5"
8'X8' SLIDER - 96.25" X 92.5"
FRONT ENTRY DOOR - 64..25" X 82.5"

UNIT A

BACK ELEVATION

1/4" = 1'-0"

UNIT B

© COPYRIGHT 2019 - M.Z.O. ARCHITECTURAL GROUP, INC. OWNS THE COPYRIGHT IN THIS DOCUMENT. NO REPRODUCTION OR OTHER USE IS ALLOWED WITHOUT THE EXPRESS WRITTEN CONSENT OF M.Z.O. ARCHITECTURAL GROUP, INC.

The MZO GROUP
DESIGNERS ■ ARCHITECTS ■ PLANNERS
IN THE MAQUELLE TRADITION
255 Main Street, Suite 201 ■ Stoneham, Massachusetts 02180
Voice: 781-279-4446 ■ Fax: 781-279-4448 ■ E-Mail: mzo@mzogroup.com ■ www.mzogroup.com

REGISTERED ARCHITECT ■ ALEXANDER M. ZEPKIN ■ NO. 7292 ■ STONEHAM, MA ■ COMMONWEALTH OF MASSACHUSETTS

Cape Club Estates
Sharon, MA

Elevations I

SCALE: 1/4"=1'-0"

Date / Drawn by
02/12/19

Date/Revised by

JOB NO. 5916

A5

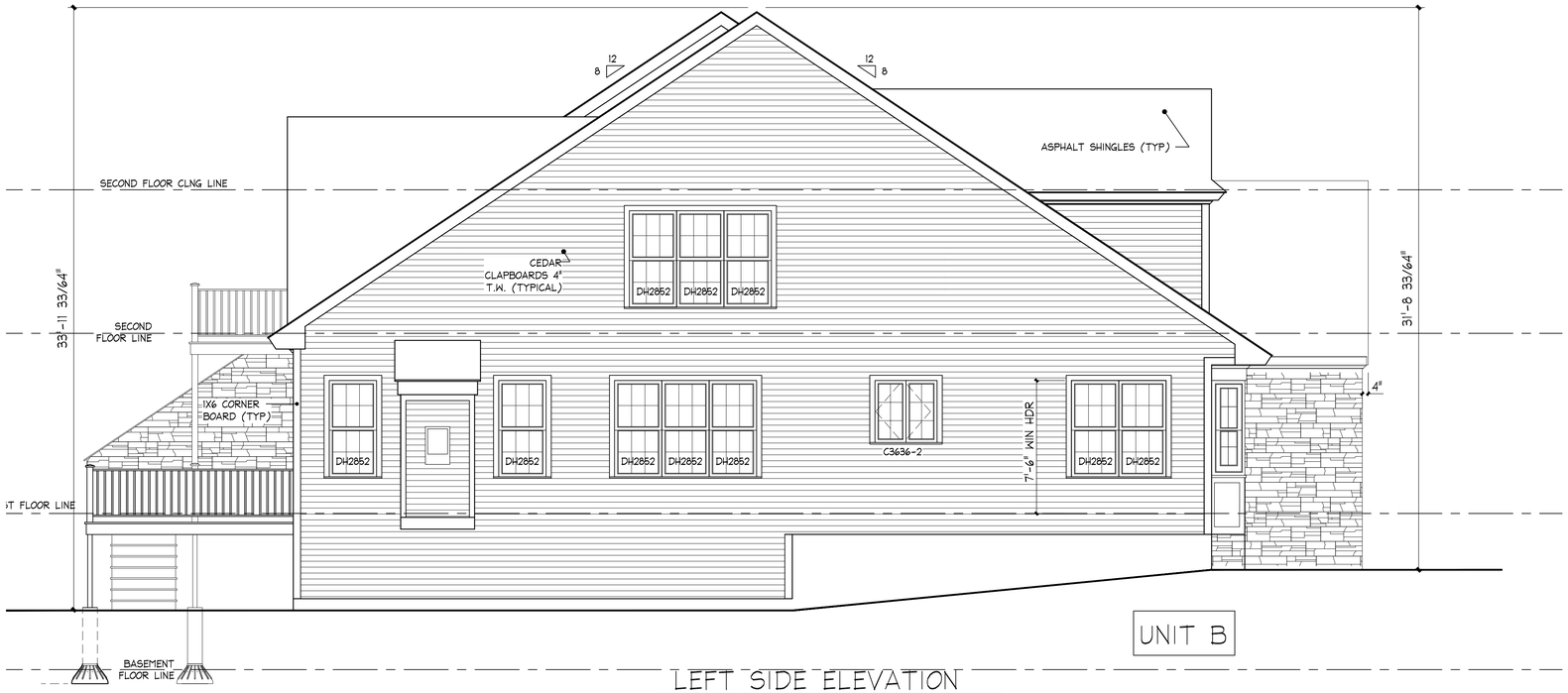

UNIT B

LEFT SIDE ELEVATION

1/4" = 1'-0"

HARVEY WINDOW ROUGH OPENINGS (WIDTH X HEIGHT)
DH20410 - 26" X 61.5"
PW42410 - 50.5" X 61.5"
DH2836 - 34" X 37.5"
DH2852 - 34" X 65.5"
DH2852-2 - 66.25" X 65.5"
DH2852-3 - 98.75" X 65.5"
DH1846/DH2846/DH1846 - 74.5" X 57.5"
C3636-2 - 41.75 X 42"
PW2923 - 33.5" X 27.5"
8'X8' SLIDER - 96.25" X 92.5"
FRONT ENTRY DOOR - 64..25" X 82.5"

UNIT A

RIGHT SIDE ELEVATION

1/4" = 1'-0"

© COPYRIGHT 2019 - M.Z.O. ARCHITECTURAL GROUP, INC. OWNS THE COPYRIGHT IN THIS DOCUMENT. NO REPRODUCTION OR OTHER USE IS ALLOWED WITHOUT THE EXPRESS WRITTEN CONSENT OF M.Z.O. ARCHITECTURAL GROUP, INC.

The MZO GROUP
DESIGNERS ■ ARCHITECTS ■ PLANNERS
IN THE MAQUELLE TRADITION
255 Main Street, Suite 201 ■ Stoneham, Massachusetts 02180
Voice: 781-279-4446 ■ Fax: 781-279-4448 ■ E-Mail: mzo@mzogroup.com ■ www.mzogroup.com

REGISTERED ARCHITECT — MICHAEL Z. OSBORNE — No. 22892 — STONEHAM, MA — COMMONWEALTH OF MASSACHUSETTS

Cape Club Estates
Sharon, MA

Elevations II

SCALE: 1/4"=1'-0"

Date / Drawn by
02/12/19

Date/Revised by

JOB NO. 5916

A6

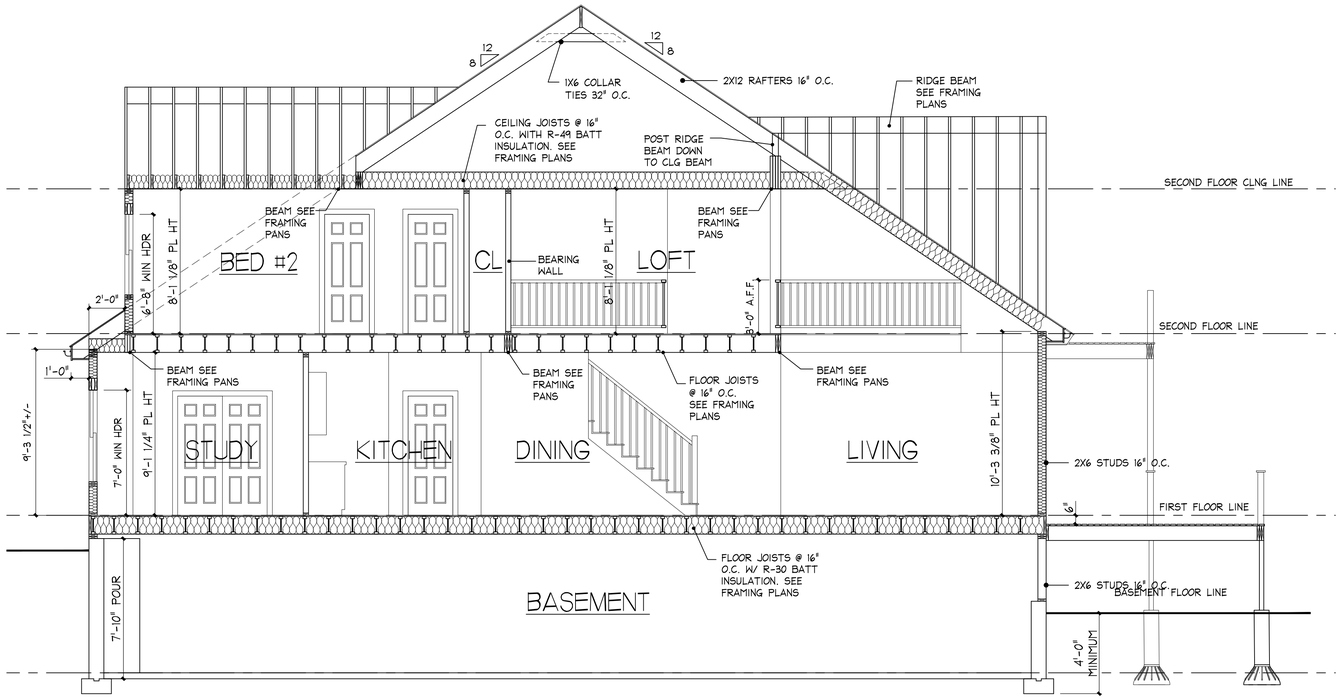

SECTION A

1/4" = 1'-0"

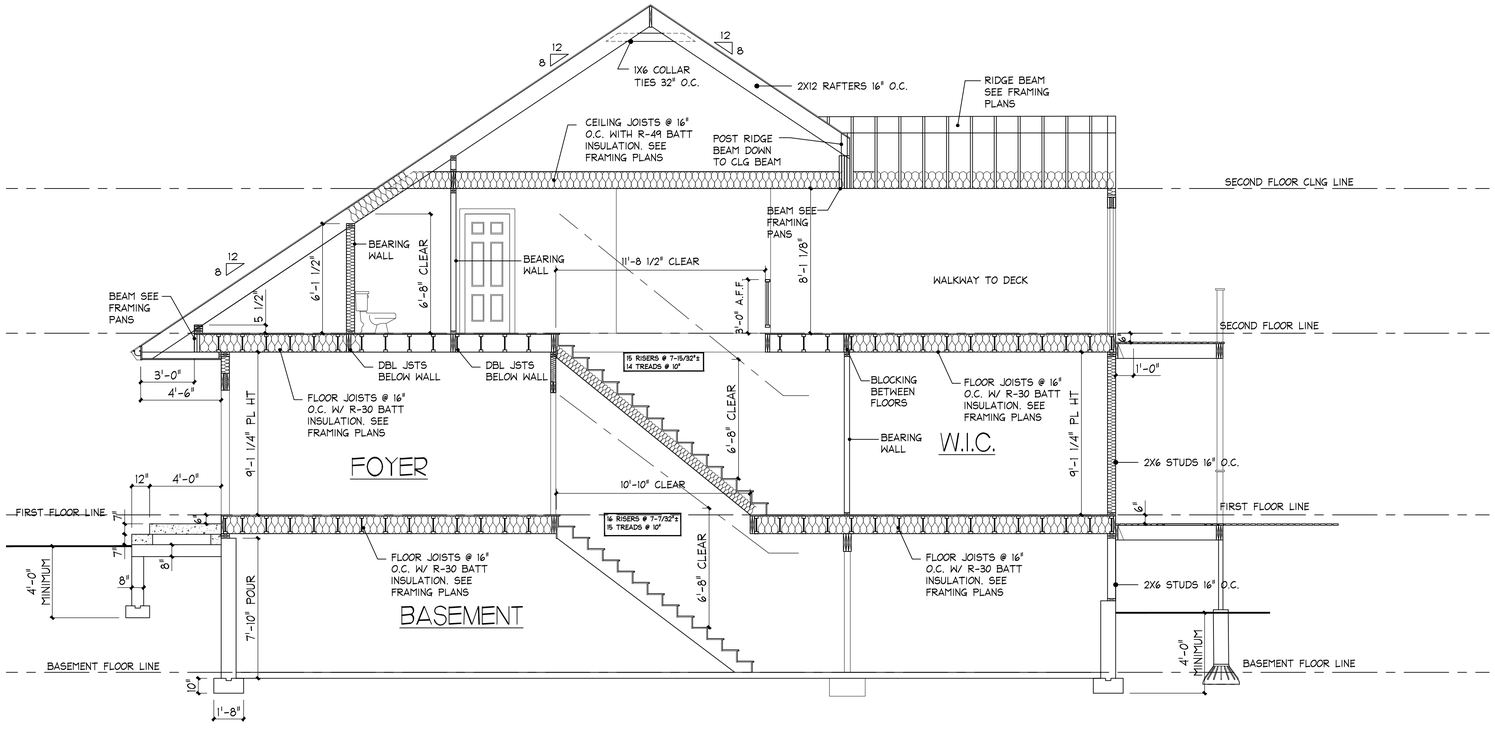

SECTION B

1/4" = 1'-0"

© COPYRIGHT 2019 - M.Z.O. ARCHITECTURAL GROUP, INC. OWNS THE COPYRIGHT IN THIS DOCUMENT. NO REPRODUCTION OR OTHER USE IS ALLOWED WITHOUT THE EXPRESS WRITTEN CONSENT OF M.Z.O. ARCHITECTURAL GROUP, INC.

The MZO GROUP
DESIGNERS ■ ARCHITECTS ■ PLANNERS
IN THE MAQUELLE TRADITION
255 Main Street, Suite 201 ■ Stoneham, Massachusetts 02180
Voice: 781-279-4446 ■ Fax: 781-279-4448 ■ E-Mail: mzo@mzogroup.com ■ www.mzogroup.com

REGISTERED ARCHITECT — MICHAEL Z. OSTROWSKI — NO. 7292 — STONEHAM, MA — COMMONWEALTH OF MASSACHUSETTS

Cape Club Estates
Sharon, MA

Sections I

SCALE: 1/4"=1'-0"

Date / Drawn by
02/12/19

Date/Revised by

JOB NO. 5916

A7

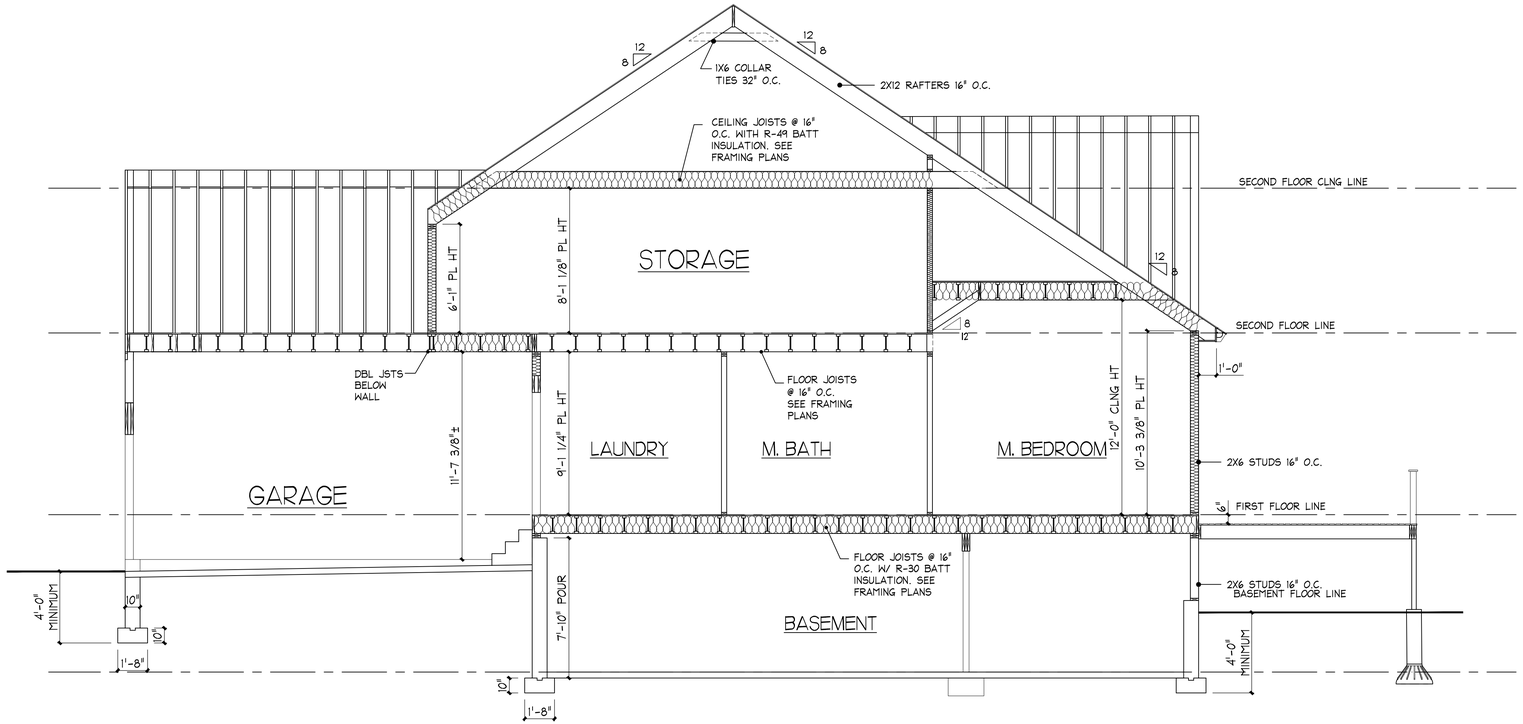

SECTION C

1/4" = 1'-0"

© COPYRIGHT 2019 - M.Z.O. ARCHITECTURAL GROUP, INC. OWNS THE COPYRIGHT IN THIS DOCUMENT. NO REPRODUCTION OR OTHER USE IS ALLOWED WITHOUT THE EXPRESS WRITTEN CONSENT OF M.Z.O. ARCHITECTURAL GROUP, INC.

The MZO GROUP
DESIGNERS ■ ARCHITECTS ■ PLANNERS
IN THE *MAQUELLE* TRADITION
355 Main Street, Suite 201 ■ Stoneham, Massachusetts 02180
Voice: 781-279-4446 ■ Fax: 781-279-4448 ■ E-Mail: mzo@mzogroup.com ■ www.mzogroup.com

REGISTERED ARCHITECT ■ ROBERT J. ZEMBKO ■ NO. 7292 ■ STONEHAM, MA ■ COMMONWEALTH OF MASSACHUSETTS

Cape Club Estates
Sharon, MA

Sections II

SCALE: 1/4"=1'-0"

Date / Drawn by
02/12/19

Date/Revised by

JOB NO. 5916

A8

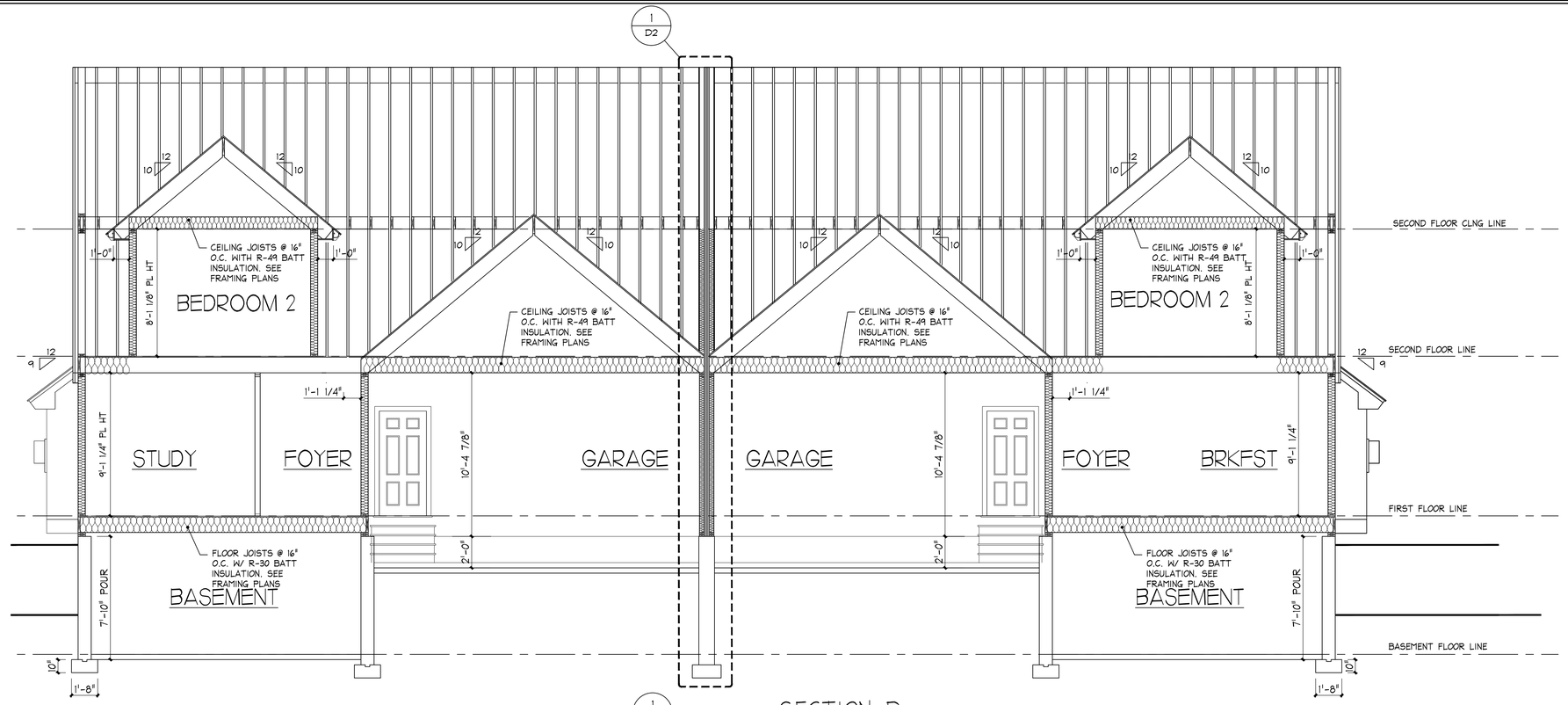

SECTION D

1/4" = 1'-0"

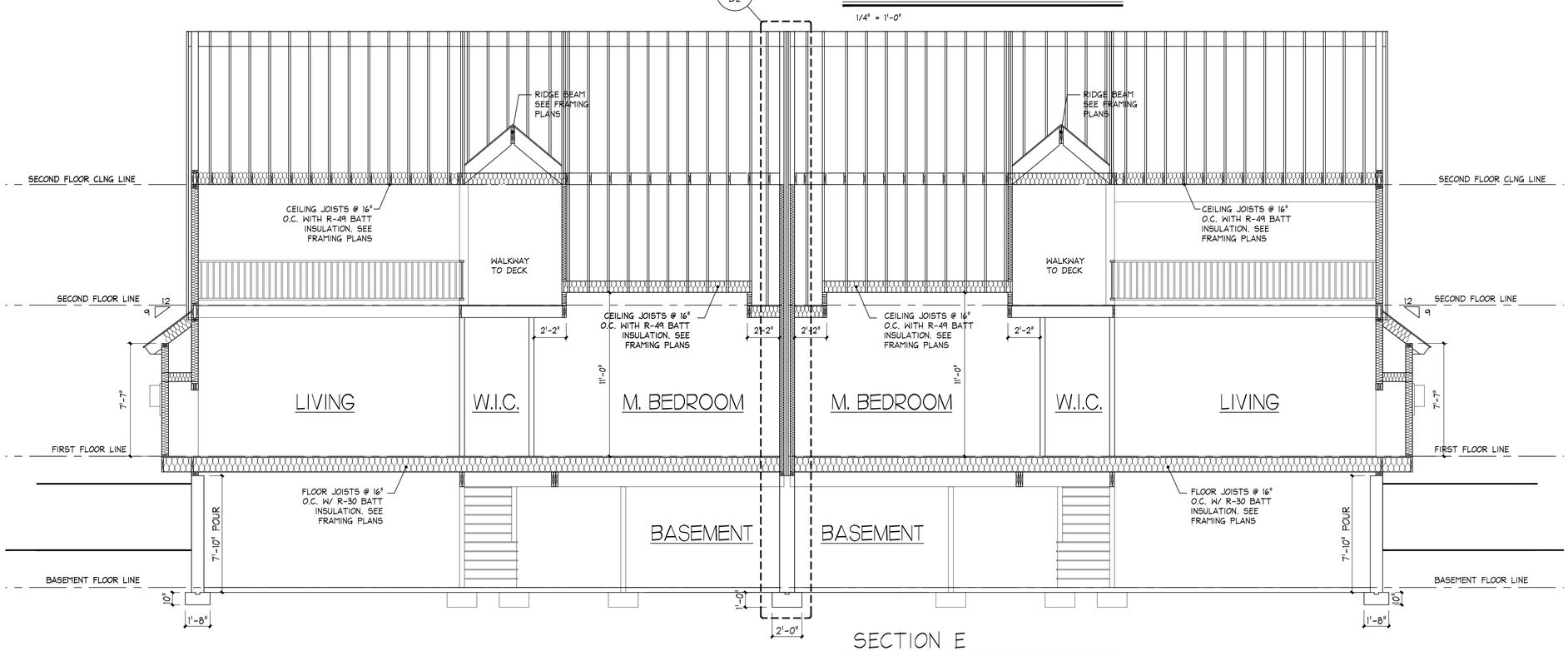

SECTION E

1/4" = 1'-0"

The MZO GROUP

© COPYRIGHT 2019 - M.Z.O. ARCHITECTURAL GROUP, INC. OWNS THE COPYRIGHT IN THIS DOCUMENT. NO REPRODUCTION OR OTHER USE IS ALLOWED WITHOUT THE EXPRESS WRITTEN CONSENT OF M.Z.O. ARCHITECTURAL GROUP, INC.

The MZO GROUP
DESIGNERS ■ ARCHITECTS ■ PLANNERS
IN THE *MAQUELLE* TRADITION
255 Main Street, Suite 201 ■ Stoneham, Massachusetts 02180
Voice: 781-279-4446 ■ Fax: 781-279-4448 ■ E-Mail: mzo@mzogroup.com ■ www.mzogroup.com

REGISTERED ARCHITECT — MICHAEL Z. ORFEO — NO. 7292 — STONEHAM, MA — COMMONWEALTH OF MASSACHUSETTS

Cape Club Estates
Sharon, MA

Sections I

SCALE: 1/4"=1'-0"

Date / Drawn by
02/12/19

Date/Revised by

JOB NO. 5916

A9

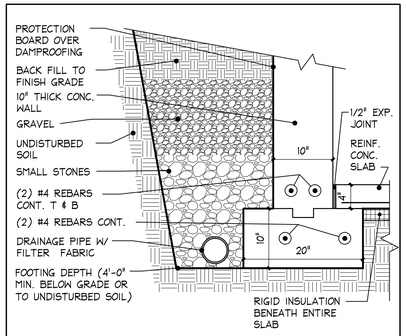

1 TYP. FOUND. FOOTING

SCALE: 1" = 1' - 0"

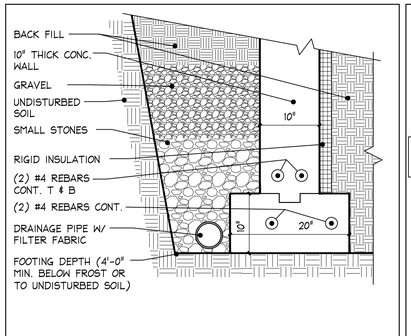

2 FOOTING @ WALK-OUT

SCALE: 1" = 1' - 0"

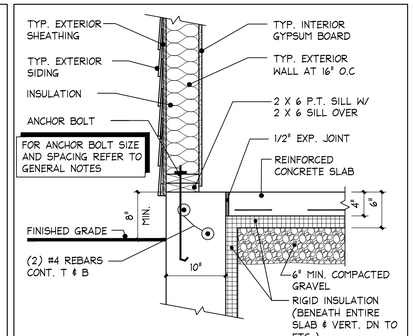

3 FOUNDATION @ WALK-OUT

SCALE: 1" = 1' - 0"

SIDING

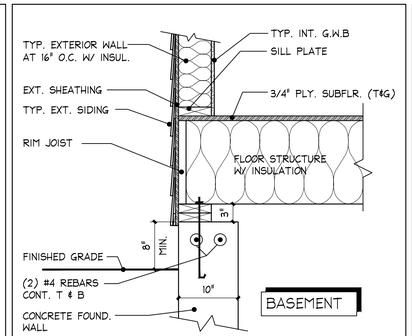

4 TYP. FOUNDATION WALL

SCALE: 1" = 1' - 0"

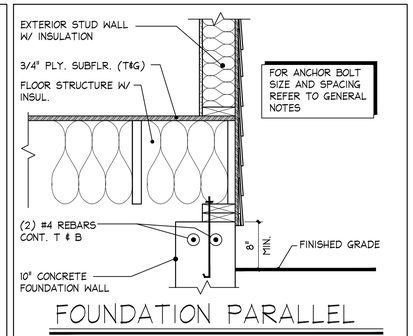

5 FOUNDATION PARALLEL TO FRAMING

SCALE: 1" = 1' - 0"

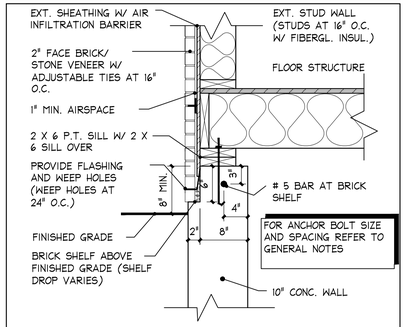

6 2" STONE/BRICK SHELF DETAIL

SCALE: 1" = 1' - 0"

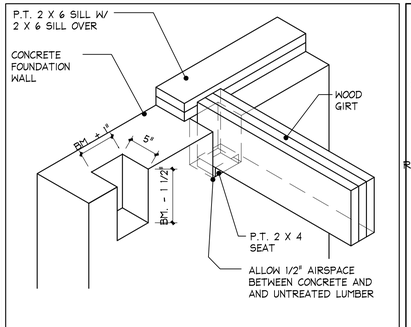

7 BEAM POCKET (WOOD)

SCALE: 1" = 1' - 0"

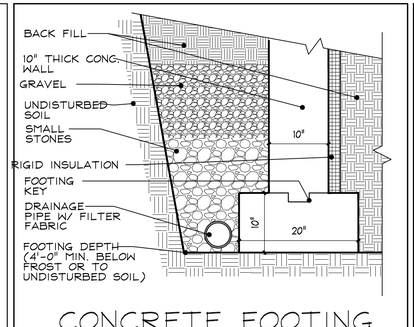

8 CONCRETE FOOTING

SCALE: 1" = 1' - 0"

SLAB ON GRADE OR FROST WALL

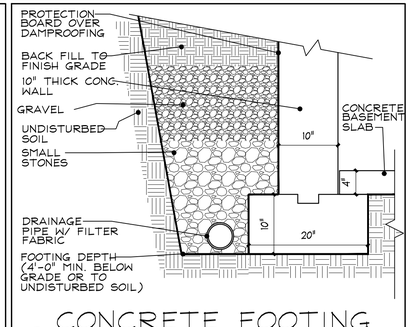

9 CONCRETE FOOTING

SCALE: 1" = 1' - 0"

FULL BASEMENT

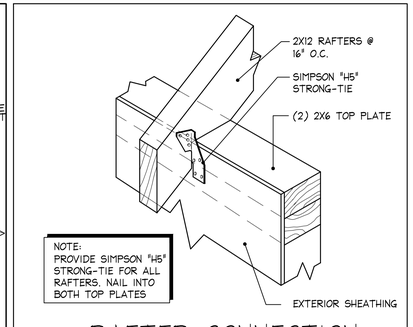

10 RAFTER CONNECTION

SCALE: NOT TO SCALE

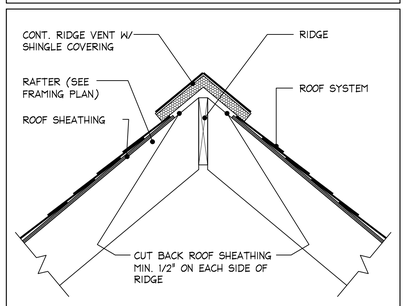

11 RIDGE VENT DETAIL

SCALE: 1" = 1' - 0"

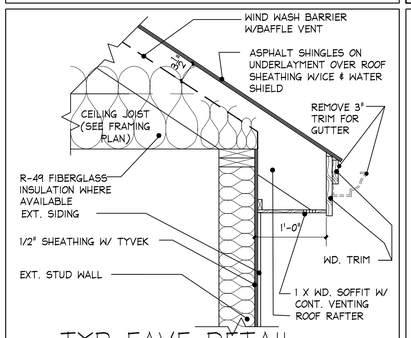

12 TYP EAVE DETAIL

SCALE : 1" = 1' - 0"

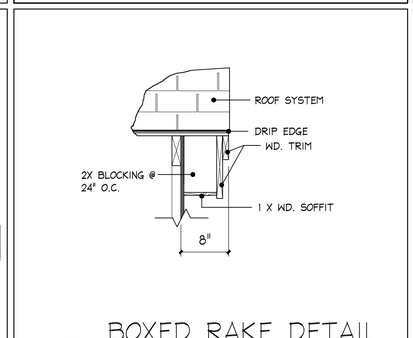

13 BOXED RAKE DETAIL

SCALE: 1" = 1' - 0"

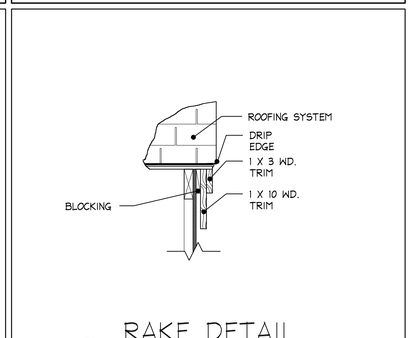

14 RAKE DETAIL

SCALE: 1" = 1' - 0"

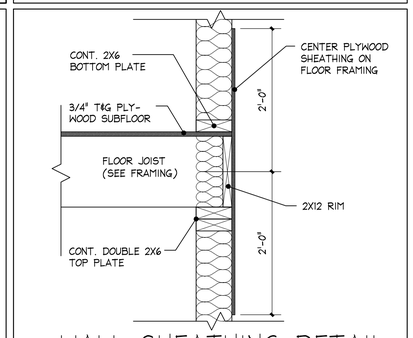

15 WALL SHEATHING DETAIL

SCALE: 1" = 1' - 0"

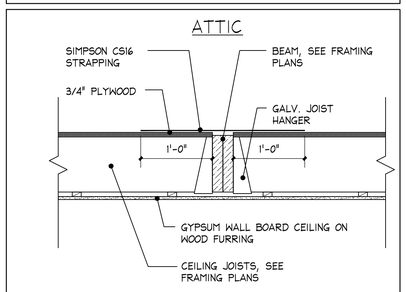

16 CEILING BEAM DETAIL

SCALE: 1" = 1' - 0"

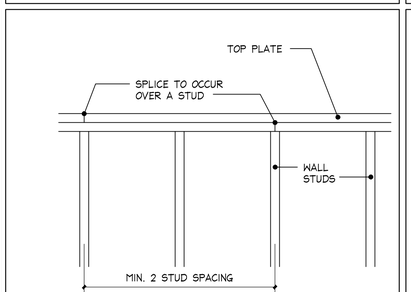

17 TOP PL SPLICING DETAIL

SCALE: 1" = 1' - 0"

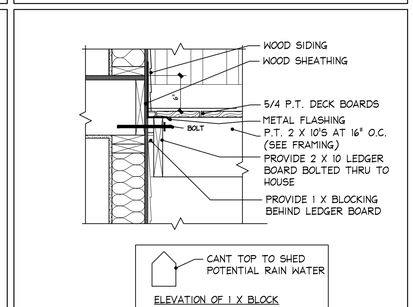

18 DECK AT WALL

SCALE: 1" = 1' - 0"

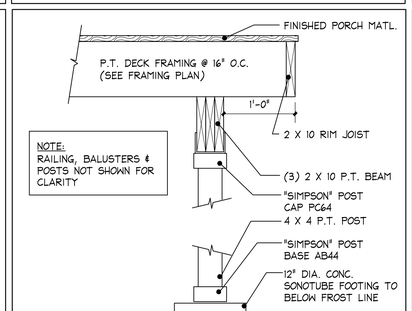

19 DECK AT SONOTUBE

SCALE: 1" = 1' - 0"

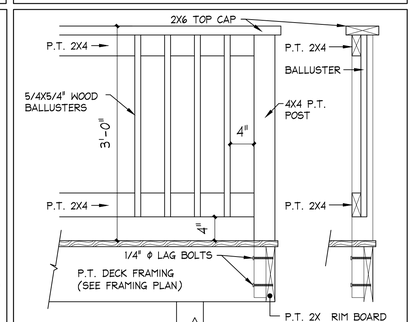

20 DECK RAIL

SCALE: 1" = 1' - 0"

© COPYRIGHT 2019 - M.Z.O. ARCHITECTURAL GROUP, INC. OWNS THE COPYRIGHT IN THIS DOCUMENT. NO REPRODUCTION OR OTHER USE IS ALLOWED WITHOUT THE EXPRESS WRITTEN CONSENT OF M.Z.O. ARCHITECTURAL GROUP, INC.

The MZO GROUP
DESIGNERS ■ ARCHITECTS ■ PLANNERS
IN THE MAQUELLE TRADITION
255 Main Street, Suite 201 ■ Stoneham, Massachusetts 02180
Voice: 781-279-4446 ■ Fax: 781-279-4448 ■ E-Mail: mzo@mzogroup.com ■ www.mzogroup.com

REGISTERED ARCHITECT ■ STEPHEN M. ZOLLO ■ NO. 7292 ■ STONEHAM, MA ■ COMMONWEALTH OF MASSACHUSETTS

Cape Club Estates
Sharon, MA

Details

SCALE: 1/4"=1'-0"

Date / Drawn by
02/12/19

Date/Revised by

JOB NO. 5916

D1

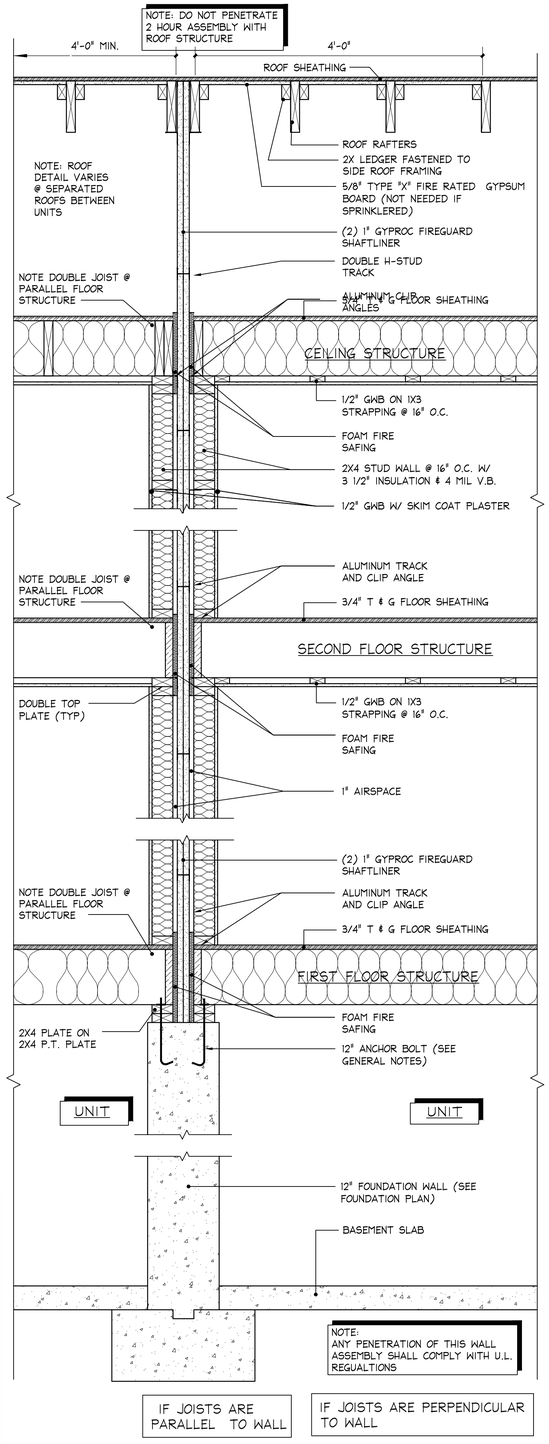

1 2 HOUR UNIT SEPARATION WALL

SCALE: 1" = 1' - 0" BASED ON UL 336 AND GA FILE NO. ASW 1001 STC RATED 60-64 (UNITS SIDE BY SIDE)

2 HOUR SEPERATION WALL NOTE:

IBC 706.6.4.3
"IN BUILDINGS OF TYPE III, IV AND V CONSTRUCTION, WALLS SHALL BE PERMITTED TO TERMINATE AT THE UNDERSIDE OF COMBUSTIBLE ROOF SHEATHING OR DECKS PROVIDED: THE ROOF IS PROTECTED WITH 5/8" (15.9MM) TYPE X GYPSUM BOARD DIRECTLY BENEATH THE UNDERSIDE OF THE ROOF SHEATHING DECK AND SUPPORTED BY A MINIMUM OF 2" (51MM) NOMINAL LEDGERS ATTACHED TO THE SIDES OF THE ROOF FRAMING MEMBERS FOR A MINIMUM DISTANCE OF 4' (1220MM) ON BOTH SIDES OF THE FIRE WALL."

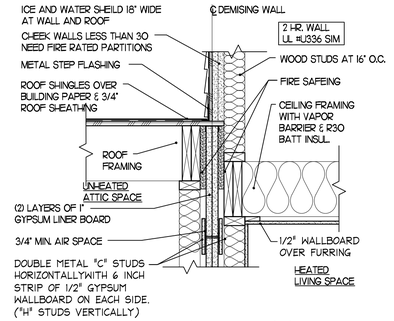

2 DEMISING WALL DETAIL

SCALE: 1" = 1' - 0"

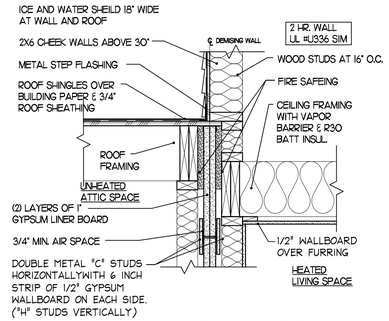

3 DEMISING WALL DETAIL

SCALE: 1" = 1' - 0"

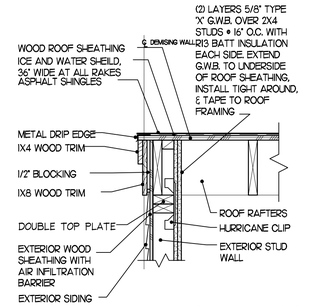

4 DEMISING WALL DETAIL

SCALE: 1" = 1' - 0" 2 HR. WALL G.A. FILE #WP5520

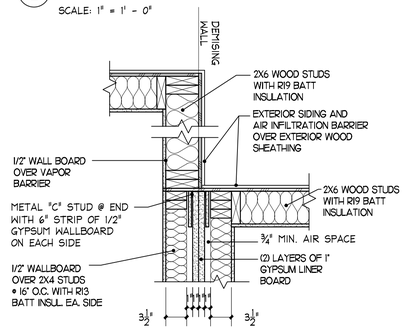

5 DEMISING WALL PLAN DETAIL

SCALE: 1" = 1' - 0" 2 HR. WALL UL #U336

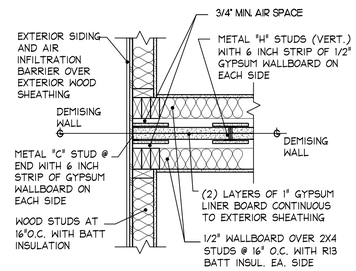

6 DEMISING WALL PLAN DETAIL

SCALE: 1" = 1' - 0" 2 HR. WALL UL #U336

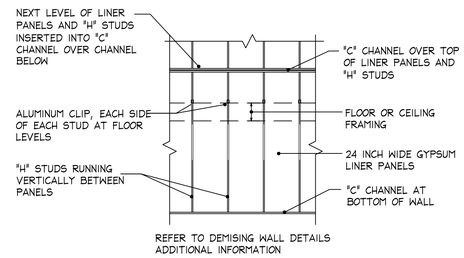

7 DEMISING WALL DIAGRAM

NOT TO SCALE

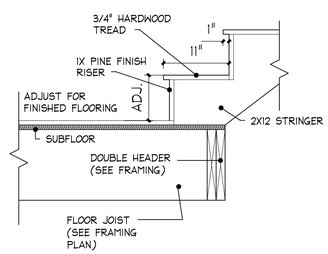

8 STAIR BASE DETAIL

SCALE: 1" = 1' - 0"

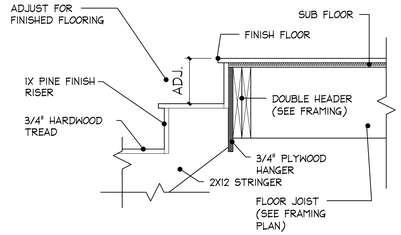

9 STAIR HEAD DETAIL

SCALE: 1" = 1' - 0"

© COPYRIGHT 2019 - M.Z.O. ARCHITECTURAL GROUP, INC. OWNS THE COPYRIGHT IN THIS DOCUMENT. NO REPRODUCTION OR OTHER USE IS ALLOWED WITHOUT THE EXPRESS WRITTEN CONSENT OF M.Z.O. ARCHITECTURAL GROUP, INC.

The MZO GROUP
DESIGNERS ■ ARCHITECTS ■ PLANNERS
IN THE MAQUELLE TRADITION
255 Main Street, Suite 201 ■ Stoneham, Massachusetts 02180
Voice: 781-279-4446 ■ Fax: 781-279-4448 ■ E-Mail: mzo@mzogroup.com ■ www.mzogroup.com

AMERICAN REGISTERED ARCHITECT MICHAEL ALBERT BYRNE NO. 5296 STONEHAM, MA COMMONWEALTH OF MASSACHUSETTS

Cape Club Estates
Sharon, MA

Details

SCALE: 1/4"=1'-0"

Date / Drawn by 02/12/19

Date/Revised by

JOB NO. 5916

D2

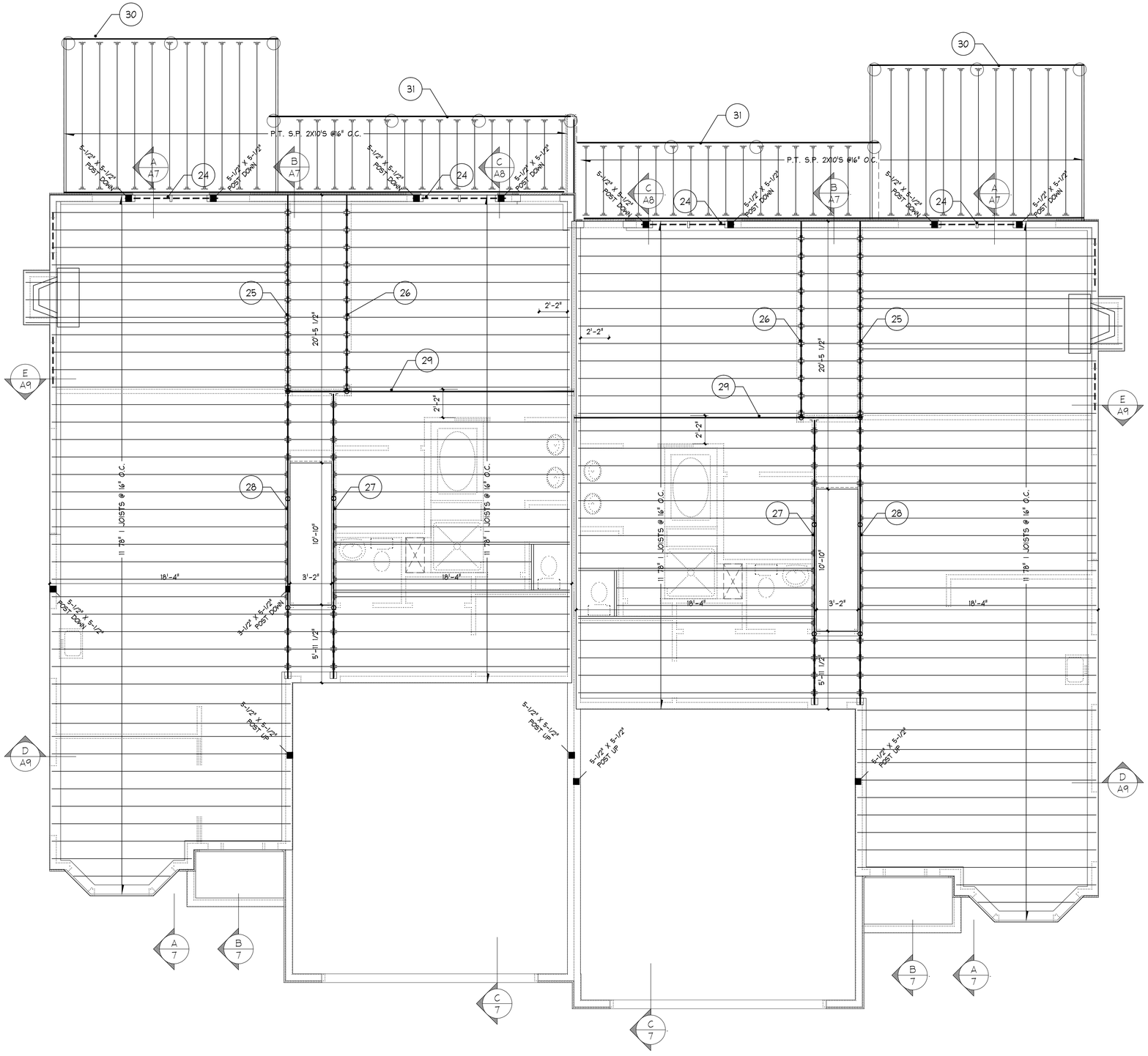

FIRST FLOOR FRAMING

SCALE: 1/4" =1'-0"

BEAM SCHEDULE

BEAM	QTY/BM	DESCRIPTION
Beam01	1	1-3/4" x 14" VL 1.7 2400 DF
Beam02	2	1-3/4" x 9-1/4" VL 1.7 2400 DF
Beam03	2	1-3/4" x 9-1/4" VL 1.7 2400 DF
Beam04	2	1-3/4" x 9-1/4" VL 1.7 2400 DF
Beam05	3	1-3/4" x 11-1/4" VL 2.0 3100 SP
Beam06	4	1-3/4" x 14" VL 2.0 3100 SP
Beam07	2	1-3/4" x 11-7/8" VL 1.7 2400 DF
Beam08	4	1-3/4" x 11-1/4" VL 2.0 3100 SP
Beam09	2	1-3/4" x 11-7/8" VL 1.7 2650 SP
Beam10	2	1-1/2" x 9-1/2" VL 1.7 2650 SP
Beam11	2	1-1/2" x 9-1/2" VL 1.7 2650 SP
Beam12	2	2x 8 SPF #2
Beam13	2	1-3/4" x 9-1/2" VL 2.0 3100 SP
Beam14	2	2x 8 SPF #2
Beam15	2	1-1/2" x 7-1/2" VL 1.7 2650 SP
Beam16	2	2x 10 SPF #2
Beam17	2	1-1/2" x 7-1/2" VL 1.8 2750 SP
Beam18	2	2x 8 SPF #2
Beam19	2	2x 8 SPF #2
Beam20	2	1-1/2" x 9-1/2" VL 1.7 2650 SP
Beam21	4	1-3/4" x 18" VL 2.0 3100 SP
Beam22	4	1-3/4" x 11-7/8" VL 2.0 3100 SP
Beam23	3	1-3/4" x 11-7/8" VL 2.0 3100 SP
Beam24	2	2x 8 SPF #2
Beam25	3	1-3/4" x 11-7/8" VL 2.0 3100 SP
Beam26	4	1-3/4" x 11-1/4" VL 2.0 3100 SP
Beam27	2	1-3/4" x 11-7/8" VL 1.7 2650 SP
Beam28	2	1-3/4" x 11-7/8" VL 1.7 2650 SP
Beam29	3	1-3/4" x 11-7/8" VL 1.7 2650 SP
Beam30	3	2x 12 SP #2
Beam31	2	2x 12 SP #2
Beam32	3	1-3/4" x 11-7/8" VL 1.7 2400 DF
Joist01	2	11-7/8" BCI 4500s-1.8

© COPYRIGHT 2019 - M.Z.O. ARCHITECTURAL GROUP, INC. OWNS THE COPYRIGHT IN THIS DOCUMENT. NO REPRODUCTION OR OTHER USE IS ALLOWED WITHOUT THE EXPRESS WRITTEN CONSENT OF M.Z.O. ARCHITECTURAL GROUP, INC.

The MZO GROUP
DESIGNERS ■ ARCHITECTS ■ PLANNERS
IN THE *MAQUELLE* TRADITION
55 Main Street, Suite 201 ■ Stoneham, Massachusetts (02180)
Voice: 781-279-4446 ■ Fax: 781-279-4448 ■ E-Mail: mzo@mzogroup.com ■ www.mzogroup.com

REGISTERED ARCHITECT — MICHAEL Z. ORFEIRA — NO. 22262 — STONEHAM, MA — COMMONWEALTH OF MASSACHUSETTS

Cape Club Estates
Sharon, MA

First Floor Framing

SCALE: 1/4"=1'-0"

Date / Drawn by
02/12/19

Date/Revised by

JOB NO. 5916

F-1

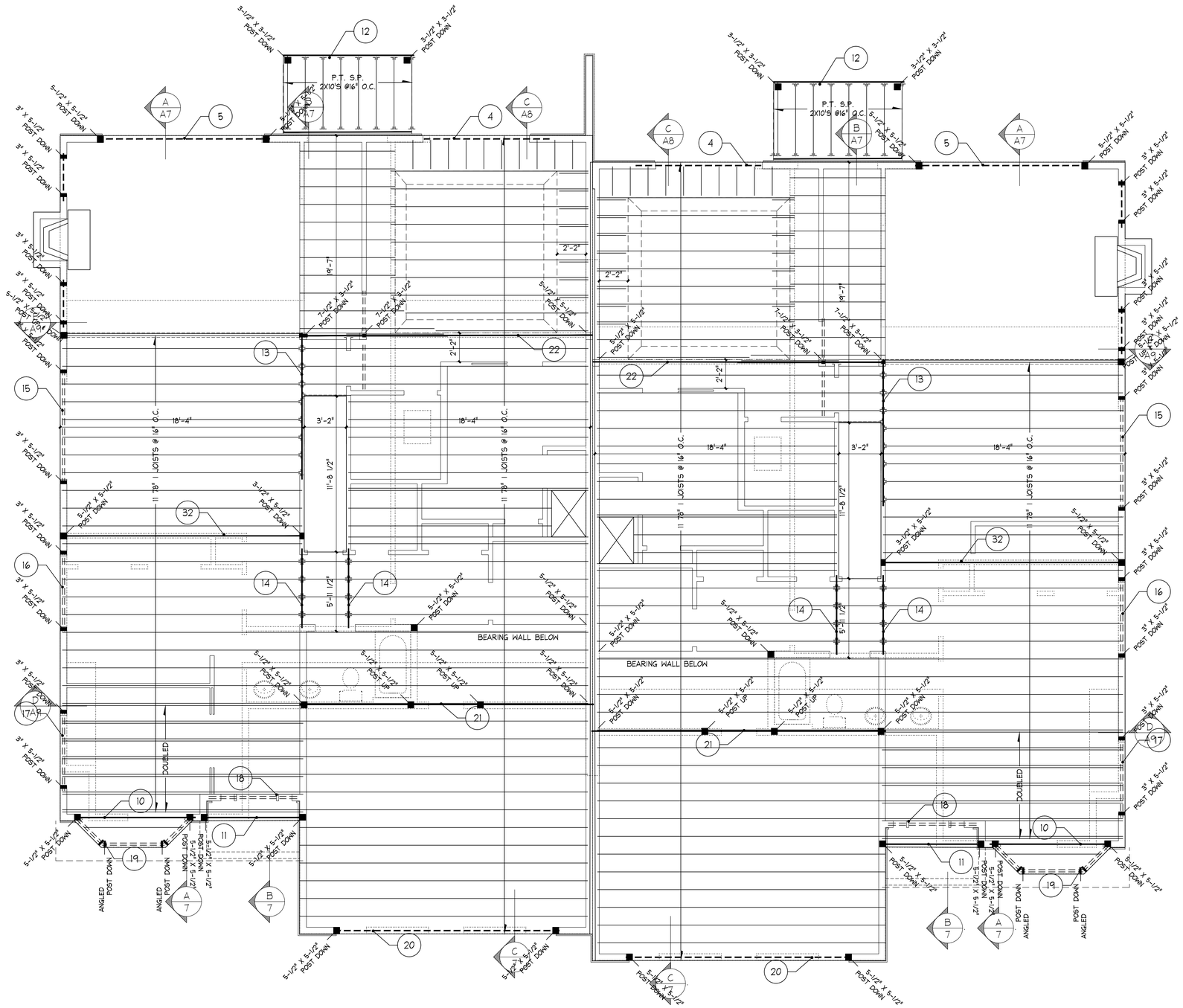

SECOND FLOOR FRAMING

SCALE: 1/4" =1'-0"

BEAM SCHEDULE

BEAM	QTY/BM	DESCRIPTION
Beam01	1	1-3/4" x 14" VL 1.7 2400 DF
Beam02	2	1-3/4" x 9-1/4" VL 1.7 2400 DF
Beam03	2	1-3/4" x 9-1/4" VL 1.7 2400 DF
Beam04	2	1-3/4" x 9-1/4" VL 1.7 2400 DF
Beam05	3	1-3/4" x 11-1/4" VL 2.0 3100 SP
Beam06	4	1-3/4" x 14" VL 2.0 3100 SP
Beam07	2	1-3/4" x 11-7/8" VL 1.7 2400 DF
Beam08	4	1-3/4" x 11-1/4" VL 2.0 3100 SP
Beam09	2	1-3/4" x 11-7/8" VL 1.7 2650 SP
Beam10	2	1-1/2" x 9-1/2" VL 1.7 2650 SP
Beam11	2	1-1/2" x 9-1/2" VL 1.7 2650 SP
Beam12	2	2x 8 SPF #2
Beam13	2	1-3/4" x 9-1/2" VL 2.0 3100 SP
Beam14	2	2x 8 SPF #2
Beam15	2	1-1/2" x 7-1/2" VL 1.7 2650 SP
Beam16	2	2x 10 SPF #2
Beam17	2	1-1/2" x 7-1/2" VL 1.8 2750 SP
Beam18	2	2x 8 SPF #2
Beam19	2	2x 8 SPF #2
Beam20	2	1-1/2" x 9-1/2" VL 1.7 2650 SP
Beam21	4	1-3/4" x 18" VL 2.0 3100 SP
Beam22	4	1-3/4" x 11-7/8" VL 2.0 3100 SP
Beam23	3	1-3/4" x 11-7/8" VL 2.0 3100 SP
Beam24	2	2x 8 SPF #2
Beam25	3	1-3/4" x 11-7/8" VL 2.0 3100 SP
Beam26	4	1-3/4" x 11-1/4" VL 2.0 3100 SP
Beam27	2	1-3/4" x 11-7/8" VL 1.7 2650 SP
Beam28	2	1-3/4" x 11-7/8" VL 1.7 2650 SP
Beam29	3	1-3/4" x 11-7/8" VL 1.7 2650 SP
Beam30	3	2x 12 SP #2
Beam31	2	2x 12 SP #2
Beam32	3	1-3/4" x 11-7/8" VL 1.7 2400 DF
Joist01	2	11-7/8" BCI 4500s-1.8

c COPYRIGHT 2019 - M.Z.O. ARCHITECTURAL GROUP, INC. OWNS THE COPYRIGHT IN THIS DOCUMENT. NO REPRODUCTION OR OTHER USE IS ALLOWED WITHOUT THE EXPRESS WRITTEN CONSENT OF M.Z.O. ARCHITECTURAL GROUP, INC.

The MZO GROUP
DESIGNERS ■ ARCHITECTS ■ PLANNERS
IN THE *Maquelle* TRADITION
555 Main Street, Suite 201 ■ Stoneham, Massachusetts 02180
Voice: 781-279-4446 ■ Fax: 781-279-4448 ■ E-Mail: mzo@mzogroup.com ■ www.mzogroup.com

REGISTERED ARCHITECT — MICHAEL Z. OSKOIAN — NO. 22262 — STONEHAM, MA — COMMONWEALTH OF MASSACHUSETTS

Cape Club Estates
Sharon, MA

Secondt Floor Framing

SCALE: 1/4"=1'-0"

Date / Drawn by
02/12/19

Date/Revised by

JOB NO. 5916

F-2

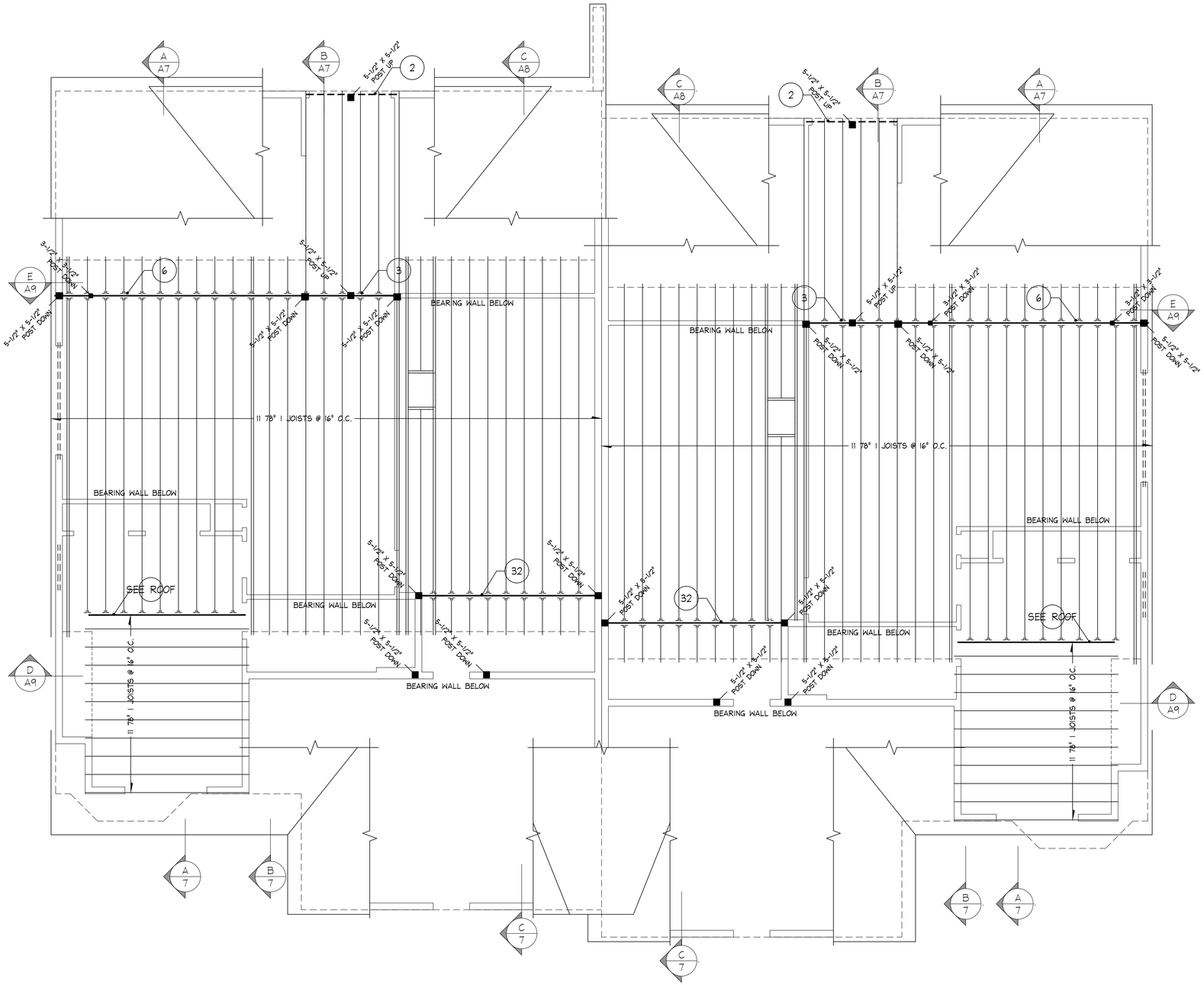

CEILING FRAMING
SCALE: 1/4" =1'-0"

BEAM SCHEDULE

BEAM	QTY/BM	DESCRIPTION
Beam01	1	1-3/4" x 14" VL 1.7 2400 DF
Beam02	2	1-3/4" x 9-1/4" VL 1.7 2400 DF
Beam03	2	1-3/4" x 9-1/4" VL 1.7 2400 DF
Beam04	2	1-3/4" x 9-1/4" VL 1.7 2400 DF
Beam05	3	1-3/4" x 11-1/4" VL 2.0 3100 SP
Beam06	4	1-3/4" x 14" VL 2.0 3100 SP
Beam07	2	1-3/4" x 11-7/8" VL 1.7 2400 DF
Beam08	4	1-3/4" x 11-1/4" VL 2.0 3100 SP
Beam09	2	1-3/4" x 11-7/8" VL 1.7 2650 SP
Beam10	2	1-1/2" x 9-1/2" VL 1.7 2650 SP
Beam11	2	1-1/2" x 9-1/2" VL 1.7 2650 SP
Beam12	2	2x 8 SPF #2
Beam13	2	1-3/4" x 9-1/2" VL 2.0 3100 SP
Beam14	2	2x 8 SPF #2
Beam15	2	1-1/2" x 7-1/2" VL 1.7 2650 SP
Beam16	2	2x 10 SPF #2
Beam17	2	1-1/2" x 7-1/2" VL 1.8 2750 SP
Beam18	2	2x 8 SPF #2
Beam19	2	2x 8 SPF #2
Beam20	2	1-1/2" x 9-1/2" VL 1.7 2650 SP
Beam21	4	1-3/4" x 18" VL 2.0 3100 SP
Beam22	4	1-3/4" x 11-7/8" VL 2.0 3100 SP
Beam23	3	1-3/4" x 11-7/8" VL 2.0 3100 SP
Beam24	2	2x 8 SPF #2
Beam25	3	1-3/4" x 11-7/8" VL 2.0 3100 SP
Beam26	4	1-3/4" x 11-1/4" VL 2.0 3100 SP
Beam27	2	1-3/4" x 11-7/8" VL 1.7 2650 SP
Beam28	2	1-3/4" x 11-7/8" VL 1.7 2650 SP
Beam29	3	1-3/4" x 11-7/8" VL 1.7 2650 SP
Beam30	3	2x 12 SP #2
Beam31	2	2x 12 SP #2
Beam32	3	1-3/4" x 11-7/8" VL 1.7 2400 DF
Joist01	2	11-7/8" BCI 4500s-1.8

c COPYRIGHT 2019 - M.Z.O. ARCHITECTURAL GROUP, INC. OWNS THE COPYRIGHT IN THIS DOCUMENT. NO REPRODUCTION OR OTHER USE IS ALLOWED WITHOUT THE EXPRESS WRITTEN CONSENT OF M.Z.O. ARCHITECTURAL GROUP, INC.

The MZO GROUP
DESIGNERS ■ ARCHITECTS ■ PLANNERS
IN THE *MAQUELLE* TRADITION
55 Main Street, Suite 201 ■ Stoneham, Massachusetts (02180)
Voice: 781-279-4446 ■ Fax: 781-279-4448 ■ E-Mail: mzo@mzogroup.com ■ www.mzogroup.com

REGISTERED ARCHITECT ■ ALEXANDER M. ZERBY ■ NO. 22262 ■ STONEHAM, MA ■ COMMONWEALTH OF MASSACHUSETTS

Cape Club Estates
Sharon, MA

Ceiling Framing

SCALE: 1/4"=1'-0"

Date / Drawn by
02/12/19

Date/Revised by

JOB NO. 5916

F-3

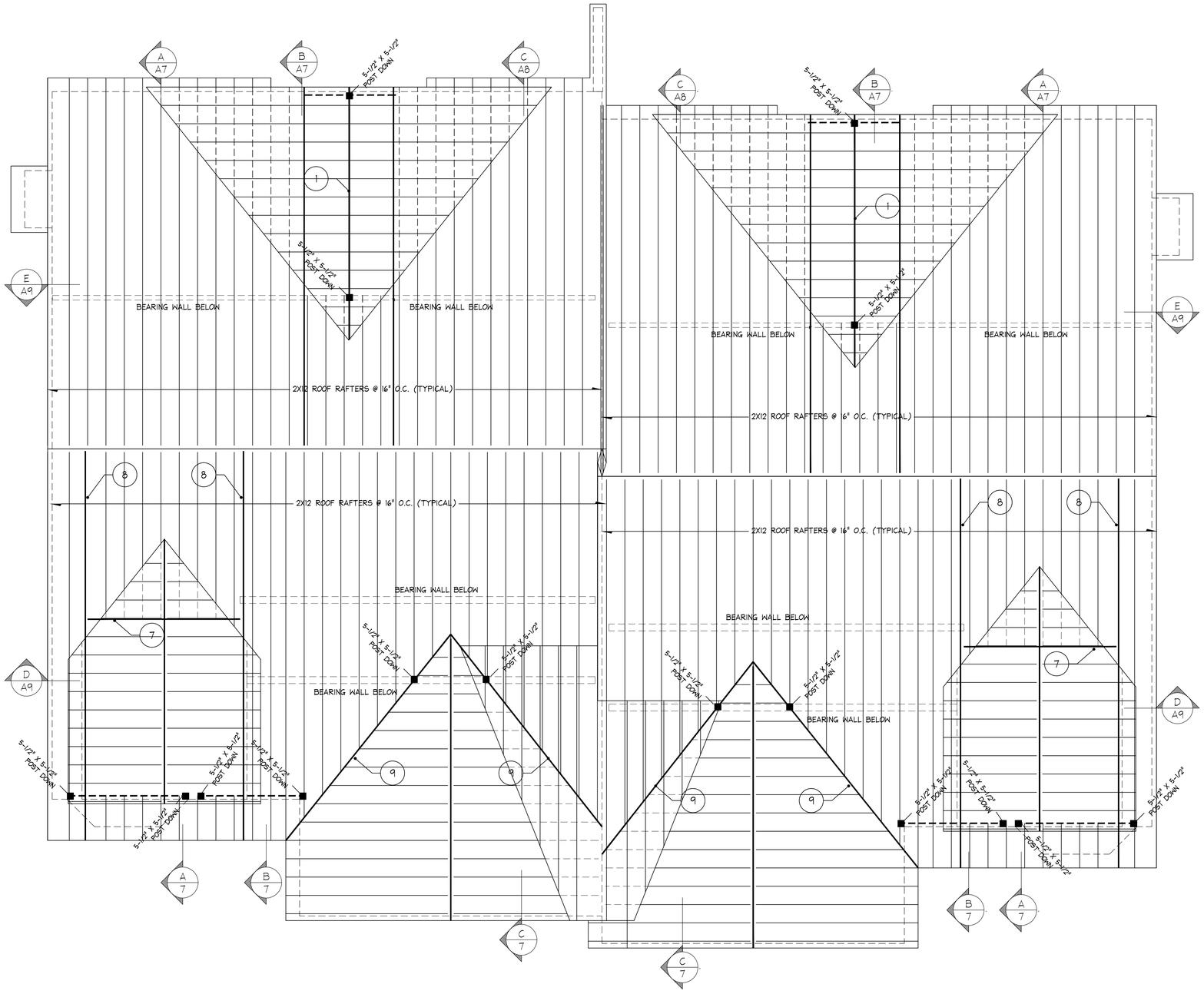

FIRST FLOOR FRAMING
SCALE: 1/4" =1'-0"

BEAM SCHEDULE

BEAM	QTY/BM	DESCRIPTION
Beam01	1	1-3/4" x 14" VL 1.7 2400 DF
Beam02	2	1-3/4" x 9-1/4" VL 1.7 2400 DF
Beam03	2	1-3/4" x 9-1/4" VL 1.7 2400 DF
Beam04	2	1-3/4" x 9-1/4" VL 1.7 2400 DF
Beam05	3	1-3/4" x 11-1/4" VL 2.0 3100 SP
Beam06	4	1-3/4" x 14" VL 2.0 3100 SP
Beam07	2	1-3/4" x 11-7/8" VL 1.7 2400 DF
Beam08	4	1-3/4" x 11-1/4" VL 2.0 3100 SP
Beam09	2	1-3/4" x 11-7/8" VL 1.7 2650 SP
Beam10	2	1-1/2" x 9-1/2" VL 1.7 2650 SP
Beam11	2	1-1/2" x 9-1/2" VL 1.7 2650 SP
Beam12	2	2x 8 SPF #2
Beam13	2	1-3/4" x 9-1/2" VL 2.0 3100 SP
Beam14	2	2x 8 SPF #2
Beam15	2	1-1/2" x 7-1/2" VL 1.7 2650 SP
Beam16	2	2x 10 SPF #2
Beam17	2	1-1/2" x 7-1/2" VL 1.8 2750 SP
Beam18	2	2x 8 SPF #2
Beam19	2	2x 8 SPF #2
Beam20	2	1-1/2" x 9-1/2" VL 1.7 2650 SP
Beam21	4	1-3/4" x 18" VL 2.0 3100 SP
Beam22	4	1-3/4" x 11-7/8" VL 2.0 3100 SP
Beam23	3	1-3/4" x 11-7/8" VL 2.0 3100 SP
Beam24	2	2x 8 SPF #2
Beam25	3	1-3/4" x 11-7/8" VL 2.0 3100 SP
Beam26	4	1-3/4" x 11-1/4" VL 2.0 3100 SP
Beam27	2	1-3/4" x 11-7/8" VL 1.7 2650 SP
Beam28	2	1-3/4" x 11-7/8" VL 1.7 2650 SP
Beam29	3	1-3/4" x 11-7/8" VL 1.7 2650 SP
Beam30	3	2x 12 SP #2
Beam31	2	2x 12 SP #2
Beam32	3	1-3/4" x 11-7/8" VL 1.7 2400 DF
Joist01	2	11-7/8" BCI 4500s-1.8

c COPYRIGHT 2019 - M.Z.O. ARCHITECTURAL GROUP, INC. OWNS THE COPYRIGHT IN THIS DOCUMENT. NO REPRODUCTION OR OTHER USE IS ALLOWED WITHOUT THE EXPRESS WRITTEN CONSENT OF M.Z.O. ARCHITECTURAL GROUP, INC.

The MZO GROUP
DESIGNERS ■ ARCHITECTS ■ PLANNERS
IN THE *MAQUELLE* TRADITION
355 Main Street, Suite 201 ■ Stoneham, Massachusetts 02180
Voice: 781-279-4446 ■ Fax: 781-279-4448 ■ E-Mail: mzo@mzogroup.com ■ www.mzogroup.com

Cape Club Estates
Sharon, MA

Roof Framing
SCALE: 1/4"=1'-0"

Date / Drawn by
02/12/19
Date/Revised by

JOB NO. 5916

F-4

GENERAL NOTES (ONE AND TWO FAMILY - NEW CONSTRUCTION)

GENERAL REQUIREMENTS:

1. BEFORE FINAL DRAWINGS AND SPECIFICATIONS (IF ANY) ARE ISSUED FOR CONSTRUCTION, THEY SHALL BE SUBMITTED TO ALL GOVERNING BUILDING AGENCIES TO INSURE THEIR COMPLIANCE WITH ALL APPLICABLE LOCAL AND NATIONAL CODES. IF CODE DISCREPANCIES IN DRAWINGS AND/OR SPECIFICATIONS APPEAR, THE ARCHITECT SHALL BE NOTIFIED OF SUCH DISCREPANCIES IN WRITING BY THE BUILDER OR THE BUILDING OFICIAL, AND ALLOWED TO ALTER THE DRAWINGS AND/OR SPECIFICATIONS SO AS TO COMPLY WITH GOVERNING CODES BEFORE CONSTRUCTION BEGINS.
2. IF CODE DISCREPANCIES ARE DISCOVERED DURING THE CONSTRUCTION PROCESS, THE ARCHITECT SHALL BE NOTIFIED AND ALLOWED AMPLE TIME TO REMEDY SAID DISCREPANCIES.
3. ALL WORK PERFORMED SHALL COMPLY WITH ALL APPLICABLE LOCAL, STATE AND NATIONAL BUILDING CODES, ORDINANCES AND REGULATIONS, AND ALL OTHER AUTHORITIES HAVING JURISDICTION.
   FOLLOWING IS A PARTIAL LIST OF APPLICABLE CODES IN FORCE:
   A. INTERNATIONAL RESIDENTIAL CODE 2015
   B. MASSACHUSETTS RESIDENTIAL CODE, 780 CMR 51.00, NINTH EDITION
   C. MASSACHUSETTS ACCESSIBILITY CODE, 521 CMR
   D. LOCAL CITY OR TOWN ZONING ORDINANCES
4. ALL CONTRACTORS, SUBCONTRACTORS, SUPPLIERS AND FABRICATORS SHALL BE RESPONSIBLE FOR THE CONTENT OF THE DRAWINGS AND/OR SPECIFICATIONS AND FOR THE SUPPLY AND DESIGN OF APPROPRIATE MATERIALS AND WORK PERFORMANCE.
5. ALL MANUFACTURED ARTICLES, MATERIALS AND EQUIPMENT SHALL BE APPLIED, INSTALLED, ERECTED, USED, CLEANED AND CONDITIONED IN STRICT ACCORDANCE WITH MANUFACTURER'S RECOMMENDATIONS.
6. ALL ALTERNATES ARE AT THE OPTION OF THE BUILDER AND SHALL BE AT THE BUILDER'S REQUEST; CONSTRUCTED IN ADDITION TO OR IN LIEU OF THE TYPICAL CONSTRUCTION, AS INDICATED ON DRAWINGS.

STRUCTURAL

DESIGN LOADS ASSUMED ON DRAWINGS:
FLOOR @ LIVING SPACE - - - - - - 40 P.S.F. LIVE/10 P.S.F. DEAD
FLOOR @ SLEEPING SPACE - - - - - 30 P.S.F. LIVE/10 P.S.F. DEAD
ATTIC FLOOR (LTD. STORAGE) - - - 20 P.S.F. LIVE/10 P.S.F. DEAD
ATTIC FLOOR (NO STORAGE) - - - - 10 P.S.F. LIVE/10 P.S.F. DEAD
BALCONIES & DECKS - - - - - - - - 40 P.S.F. LIVE/15 P.S.F. DEAD
ROOF - - - - - - - - - - - - - - - REFER TO TABLES R301.2(4) & R301.6
GUARDRAILS & HANDRAILS - - - - - 200 P.S.F. LIVE
STAIRS - - - - - - - - - - - - - - 40 P.S.F. LIVE
SOIL BEARING CAPACITY - - - - - - ASSUMED TO BE MIN. 1.5 TONS/SQ.FT.
ALLOWABLE DEFLECTION - - - - - - REFER TO TABLE R301.7

NOTE: DESIGN LOADS, CLIMATIC AND GEOGRAPHIC DESIGN CRITERIA AND SITE CONDITIONS SHOULD BE VERIFIED WITH LOCAL BUILDING CODES AND OFFICIALS. SPECIAL CONDITIONS SUCH AS SEISMIC, SNOW, WIND OR HYDROSTATIC LOADING MAY REQUIRE PROFESSIONAL REVIEW.

1. THE SOIL BEARING VALUE HAS BEEN ASSUMED AT 1.5 TONS/S.F. THE CONTRACTOR SHALL VERIFY THIS VALUE AT THE TIME OF EXCAVATION AND SHALL NOTIFY THE ARCHITECT THAT IT IS READY FOR INSPECTION OR FOR REVISION IF UNCERTAIN CONDITIONS ARE FOUND TO EXIST.
2. ALL CONCRETE WORK SHALL CONFORM TO AMERICAN CONCRETE INSTITUTE "GUIDE TO RESIDENTIAL CAST-IN-PLACE CONCRETE CONSTRUCTION" REPORT OF COMMITTEE 332.
3. OTHER CONCRETE STANDARDS AS REQUIRED BY THE I.R.C. 2015, SECTION R404 (SUCH AS ACI 318, ETC.) SHALL APPLY TO THE CONSTRUCTION OF THIS RESIDENCE FOUNDATION.
4. REINFORCING STEEL SHALL CONFORM TO ASTM A615, A706 OR A996, GRADE 40, AND WELDED WIRE FABRIC SHALL MEET ASTM A185 SPECIFICATIONS.
5. FOOTING CENTER LINES SHALL BE CENTERED UNDER THE CENTER LINE OF COLUMNS.
6. DETAILING, FABRICATION AND PLACEMENT OF ALL RE-BAR SHALL CONFORM TO ACI 315-80, SP66 MANUAL.
7. IF WATER OCCURS WITHIN THE EXCAVATION, IT SHALL BE DEWATERED BEFORE PLACING OF CONCRETE. DEWATERING SHALL BE DONE IN A MANNER THAT WILL PREVENT THE FLOW OF FINE GRAIN SOIL.
8. THE BOTTOM OF ALL EXCAVATIONS FOR FOOTINGS SHALL BE TAMPED TO DISPOSE OF ALL LOOSE MATERIAL BEFORE THE CONCRETE IS PLACED. COMPACTION SHOULD NOT EXCEED THE NATURAL NATURAL DENSITY OF THE SOIL.
9. ALL CONCRETE FORMWORK SHALL BE PROPERLY CONSTRUCTED AND WELL BRACED TO PRODUCE PLUMB, STRAIGHT, LEVEL AND TRUE SURFACES. BOWED, PILLOWED AND IRREGULAR WALL SURFACES WILL NOT BE ACCEPTED AND MAY REQUIRE REMOVAL AND RECONSTRUCTION BY THE FORM CONTRACTOR AT HIS EXPENSE IF DIRECTED BY THE ARCHITECT AND THE OWNER.
10. THE FOUNDATION WALLS SHALL NOT BE BACKFILLED UNTIL THE FIRST FLOOR DECK IS IN PLACE TO BRACE WALL. DAMAGED WALLS WILL BE REPLACED AT THE CONTRACTORS EXPENSE IF BACKFILLING IS DONE WITHOUT THE FLOOR IN PLACE.
11. STRUCTURAL STEEL SHALL BE ASTM A36 AND SHALL BE PAINTED ONE SHOP COAT OF METAL PRIMER. BOLTS SHALL BE ASTM A325, ANCHOR BOLTS SHALL BE ASTM A307, MIN. 1/2" DIAMETER.
12. "LALLY" COLUMNS SHALL BE SCHEDULE 40 PIPE ASTM A53 GRADE B 3-1/2" DIAMETER OR STEEL TUBES 3" X 3" X 1/4". PAINT ONE SHOP COAT METAL PRIMER - 2 MILS THICK. (UNLESS OTHERWISE NOTED)
13. "VERSA-LAM" LUMBER SHALL BE AS MANUFACTURED BY BOISE CASCADE CORP., BOISE, ID. TRUSSED FLOOR JOISTS SHALL BE BY BOISE CASCADE CORP., WOOD FABRICATORS, INC., OR OTHER FABRICATOR APPROVED BY THE ARCHITECT. METAL FASTENERS FOR WOOD MEMBERS SHALL BE AS MFG. BY THE SIMPSON CO., "STRONG TIE" OR EQUAL APPROVED BY THE ARCHITECT.
14. UNLESS OTHERWISE NOTED, PROVIDE A 2" NOM. WOOD SILL OF APPROPRIATE WIDTH BOLTED TO THE TOP FLANGE OF ALL STEEL BEAMS WITH 3/8" DIA. BOLTS STAGGERED AT 2'-0" O.C. RIGIDLY FASTEN ALL CONNECTING RAFTERS AND JOISTS.

FOOTINGS - 20" X 10" CONT. OR AS NOTED.
- STEP FOOTINGS TO BE MAX. 1 VERTICAL ON 3 HORIZONTAL.

FOUNDATION WALLS - MINIMUM 8" BETWEEN FINISH GRADE AND TOP OF FOUNDATION WALL.
- FINISH GRADE TO SLOPE AWAY FROM FOUNDATION (MIN. 6" AWAY FROM THE FOUNDATION WITHIN THE FIRST 10'-0")
- 10" THICK CONCRETE; HEIGHT 7'-10" ABOVE FOOTING OR AS NOTED.
- 3000 P.S.I. (28 DAY STRENGTH) WITH 3/4" AGGREGATE

SLABS ON GRADE - 3000 P.S.I. (28 DAY STRENGTH) ON MIN. 6" SAND OR GRAVEL FILL WITH 6X6-W1.4 X W1.4 WELDED WIRE FABRIC.
FOOTINGS SHALL BE PLACED ON UNDISTURBED OR ENGINEERED FILL TO A DEPTH REQUIRED BY LOCAL BUILDING CODES AND FROST CONDITIONS OR DEEPER IF SHOWN.
UNREINFORCED WALLS SHALL SUPPORT A MAXIMUM OF 7'-0" UNBALANCED FILL.
DAMPPROOFING (BASEMENTS) - TWO COATS OF BITUMINOUS COATING COMPOUND FROM TOP OF FOOTING TO THE FINISHED GRADE.
WATERPROOFING (HABITABLE SPACES BELOW GRADE) - TWO PLY HOT MOPPED FELT MEMBRANE WATERPROOFING FROM TOP OF FOOTING TO THE FINISHED GRADE. JOINTS SHALL BE LAPPED & SEALED WITH AN ADHESIVE COMPATIBLE WITH THE WATERPROOFING MEMBRANE.
FOUNDATION DRAIN - INSTALL A 6" PERFORATED DRAIN TILE AT PERIMETER OF BASEMENT. TOPS OF JOINTS TO BE COVERED WITH 15# FELT AND A MINIMUM OF 18" COARSE STONE OR GRAVEL. SLOPE TILE 3/16" PER FOOT TO POINT OF DISCHARGE.
TERMITE PROTECTION - AS REQUIRED BY LOCAL CODES.
ANCHOR BOLTS - 1/2" X 12" ANCHOR BOLTS @ 6'-0" O.C. (MAX.) AND NOT MORE THAN 12" FROM CORNERS.
JOIST HANGERS - STANDARD H.W. 18 GAUGE METAL.
SPECIAL FOUNDATIONS AND FOOTINGS AS SHOWN.

CARPENTRY

FRAMING LUMBER

STUDS - NO. 3 OR STANDARD "STUD" GRADE.
JOISTS & RAFTERS - E = 1,200,000 P.S.I./FB = 850 P.S.I.
BEAMS & GIRTS - E = 1,200,000 P.S.I./FB = 850 P.S.I.
STAIR STRINGERS - NO. 1 GRADE.

FLOOR CONSTRUCTION

GENERAL FLOORS - 3/4" PLYWOOD (C-D INT APA W/EXT. GLUE) T & G GLUED TO JOISTS.

BATH & TOILET AREAS - USE WATER RESISTANCE PLYWOOD (UNDERLAYMENT C-C PLUGGED EXT. APA) OVER SUBFLOOR.

UNLESS OTHERWISE NOTED, PROVIDE:
A) DOUBLE HEADER JOISTS & TRIMMERS @ ALL FLOOR OPENINGS.
B) DOUBLE JOISTS UNDER ALL PARALLEL PARTITIONS.
C) 1 X 3 CROSS BRIDGING IN EACH JOIST BAY @ INTERVALS NOT EXCEEDING 8'-0".

NOTE: ENGINEERED FLOORS (I-JOISTS) USED AT FIRST FLOORS SHALL BE PROVIDED WITH 1/2" GYPSUM WALLBOARD MEMBRANE OR EQUIVALENT ON THE UNDERSIDE OF THE FLOOR FRAMING MEMBER, UNLESS PROTECTED BY AUTOMATIC SPRINKLER SYSTEM IN ACCORDANCE TO NFPA 13D.

WALL CONSTRUCTION (UNLESS NOTED OTHERWISE)

EXTERIOR WALLS (BEARING & NON-BEARING):
A) 2X6 STUDS @ 16" O.C. MAX.
B) ALL STUDS SHALL BE CONTINUOUS FROM BOTTOM PLATE TO TOP PLATE.

INTERIOR BEARING WALLS:
A) 12'-0" HIGH OR LESS: 2X4 STUDS @ 16" O.C. MAX.
B) OVER 12'-0": 2X6 STUDS @ 16" O.C. MAX.
C) ALL STUDS SHALL BE CONTINUOUS FROM BOTTOM PLATE TO TOP PLATE.

INTERIOR NON-BEARING WALLS:
A) 12'-0" HIGH OR LESS: 2X4 STUDS @ 16" O.C. MAX.
B) OVER 12'-0": 2X4 STUDS @ 16" O.C. MAX.

ROOF CONSTRUCTION

ROOF RAFTERS OR TRUSSES SHALL BE ATTACHED TO THE SUPPORTING WALL ASSEMBLIES IN ACCORDANCE TO INTERNATIONAL RESIDENTIAL CODE 2015, SECTION R802.11

EXTERIOR SHEATHING

WALLS - 1/2" PLYWOOD (C-D 24/0 INT APA W/EXT. GLUE)
ROOF - 5/8" PLYWOOD (C-D 24/0 INT APA W/EXT. GLUE)

INTERIOR FINISH

INTERIOR FINISHES SHALL BE IN ACCORDANCE WITH THE FLAME SPREAD AND SMOKE DEVELOP REQUIREMENTS OF THE INTERNATIONAL RESIDENTIAL CODE 2015, SECTION R302.9.

GENERAL - UNLESS OTHERWISE INDICATED, ALL INTERIOR WALLS & CEILINGS ARE TO BE COVERED WITH 1/2" GYPSUM BOARD, WITH METAL CORNER REINFORCING, TAPED & SANDED. USE MOISTURE RESISTANT BOARD AT TUBS & SHOWERS.
[*OPTIONAL 1/2" "BLUE BOARD" WITH A VENEER PLASTER SYSTEM].

THERMAL AND ENERGY EFFICIENCY (BASED ON 2015 IECC - RESIDENTIAL PROVISIONS W/MASS. AMMENDMENTS)

UNLESS OTHERWISE NOTED, PROVIDE:
A) R-20 CAVITY INSULATION OR R-13 CAVITY INSULATION + R-5 CONTINUOUS INSULATED SHEATHING IN ALL EXTERIOR WALLS.
B) R-30 INSULATION IN FLOORS OVER UNHEATED SPACES OR INSULATION SUFFICIENT TO FILL THE FRAMING CAVITY (R-19 MINIMUM).
C) R-30 INSULATION IN FLOORS OVER OPEN AIR OR INSULATION SUFFICIENT TO FILL THE FRAMING CAVITY (R-19 MINIMUM).
D) R-49 INSULATION IN ALL CEILINGS.
E) R-10 RIGID INSULATION AT SLABS ON GRADE DOWN 2'-0".
F) U FACTOR = .30 FOR ALL FENESTRATIONS (WINDOWS & GLASS DOORS).
U FACTOR = .55 FOR SKYLIGHTS.
G) VAPOR BARRIER - INSTALL A 4 MIL. POLYETHYLENE VAPOR BARRIER ON THE WARM SIDE OF ALL INSULATION.
H) GLASS - DOUBLE INSULATING GLASS AT ALL EXTERIOR GLASS AREAS & TEMPERED GLASS IN ALL SLIDING GLASS DOORS & WINDOWS LESS THAN 18" ABOVE THE FLOOR OR ANY PLATFORMS.
(SEE INTERNATIONAL RESIDENTIAL CODE 2015, SECTION R308.4 FOR REQUIREMENTS AT HAZARDOUS LOCATIONS)
I) ACCESS DOORS, HATCHES, SCUTTLES & PULL DOWN STAIRS SHALL BE INSULATED TO A LEVEL EQUIVALENT TO THE SURROUNDING FLOOR, WALL OR CEILING.

ALL EXPOSED INSULATION MATERIALS INCLUDING FACINGS, VAPOR BARRIERS, OR BREATHER PAPERS SHALL CONFORM TO THE FLAME SPREAD AND SMOKE DEVELOPED INDEX REQUIREMENTS OF THE INTERNATIONAL RESIDENTIAL CODE 2015, SECTION R302.10

ROOF VENTILATION - TOTAL NET FREE CROSS VENTILATION AREA SHALL BE 1 TO 150 OF THE AREA OF THE VENTED SPACE.
EXCEEDING 1 PERM IS INSTALLED ON THE WARM SIDE OF THE CEILING.

VENTING - EAVE - 1 1/2" CONTINUOUS SCREENED SOFFIT VENT.
- BAFFLE VENTS SHALL BE INSTALLED IN ALL RAFTER BAYS AS PER MANUFACTURER'S DETAILS TO PROVIDE FREE AIR FLOW FOR ATTIC VENTILATION. IT SHALL BE CONTINUOUS IN ALL SLOPING CEILINGS AND A MINIMUM OF ONE LENGTH (48") AT ALL EAVES.
- RIDGE/GABLE - CORAVENT AS SHOWN OR GABLE VENT, LOUVERED SIZED ON DRAWINGS.
- ALL BATH ROOMS SHALL BE PROVIDED WITH MECHINICAL VENTILATION IN ACCORDANCE WITH MASSACHUSETTS RESIDENTIAL CODE, 780 CMR 51, NINTH EDITION, SECTION R303.3 AND INTERNATIONAL RESIDENTIAL CODE 2015, SECTION M1507.

SOLAR-READY ZONE.
NEW RESIDENTIAL BUILDINGS WITH NOT LESS THAN 600 S.F. OF ROOF AREA ORIENTED BETWEEN 110 DEGREES AND 270 DEGREES OF TRUE NORTH SHALL COMPLY WITH MASSACHUSETTS RESIDENTIAL CODE, 780 CMR 51, NINTH EDITION, SECTIONS AU103.2 THROUGH AU103.8.

MISCELLANEOUS

-SILLS - FIBERGLASS SILL SEALER 1/2" X 6".
-MINIMUM STAIR TREAD IS 9", MAXIMUM RISER IS 8-1/4".
-MINIMUM STAIR WIDTH IS 3'-0" CLEAR
-ALL HANDRAILS AND GUARDRAILS SHALL CONFORM TO INTERNATIONAL RESIDENTIAL CODE 2015, SECTIONS R311.7.7 AND R312
-MAIN ENTRANCE DOOR SHALL BE MINIMUM 36" WIDE; ALL OTHER REQUIRED EXIT DOORS SHALL BE MINIMUM 32" WIDE.
-ALL EGRESS DOORS SHALL NOT BE LESS THAN 6"-8" IN HEIGHT.
-INTERIOR DOORS SHALL CONFORM TO MASSACHUSETTS RESIDENTIAL CODE, 780 CMR 51, NINTH EDITION, SECTION R311.2.1

MISCELLANEOUS (CONT'D)

AUTO FIRE SPRINKLER SYSTEMS SHALL BE IN ACCORDANCE TO THE INTERNATIONAL RESIDENTIAL CODE 2015, SECTION R313 AND AMENDMENTS IN THE MASSACHUSETTS RESIDENTIAL CODE, 780 CMR 51, NINTH EDITION, SECTIONSR313.1.1, R313.2, AND R313.2.1.

SMOKE ALARMS SHALL BE IN ACCORDANCE TO THE INTERNATIONAL RESIDENTIAL CODE 2015, SECTION R314 AND AMENDMENTS IN THE MASSACHUSETTS RESIDENTIAL. CODE, 780 CMR 51, NINTH EDITION, SECTIONS R314.1 AND R314.3.

CARBON MONOXIDE ALARMS SHALL BE IN ACCORDANCE TO THE MASSACHUSETTS RESIDENTIAL CODE, 780 CMR 51, NINTH EDITION, SECTIONS R315.1, R315.2, R315.3, R315.4 AND R315.5.

HEAT DETECTOR ALARMS SHALL BE IN ACCORDANCE TO THE MASSACHUSETTS RESIDENTIAL CODE, 780 CMR 51, NINTH EDITION, SECTIONS R314.8 AND R314.9.

IN WINDOWS WHERE THE OPENING OF AN OPERABLE WINDOW IS MORE THAN 72" ABOVE THE FIN. GRADE OR SURFACE BELOW, THE LOWEST PART OF THE CLEAR OPENING SHALL BE A MIN. OF 24" ABOVE THE FINISHED FLOOR. ALL OTHER WINDOWS & DOORS IN EXTERIOR WALLS SHALL BE IN ACCORDANCE TO THE INTERNATIONAL RESIDENTIAL CODE 2015, SECTION R312

EACH BEDROOM SHALL HAVE AT LEAST ONE WINDOW WITH A SILL HEIGHT OF NO MORE THAN 44" ABOVE THE FLOOR. EMERGENCY ESCAPE WINDOWS FROM SLEEPING ROOMS SHALL HAVE A NET CLEAR OPENING OF 3.3 S.F. THE MINIMUM NET CLEAR OPENING SHALL BE 20" X 24" IN EITHER DIRECTION. TYPICAL TOP OF WINDOW HEIGHT IS 6'-8" FROM FLOOR (TO MATCH DOOR HEIGHT) UNLESS NOTED OTHERWISE.

BOILER AREAS - 5/8" F.C. SHEET ROCK (8'X8') ON CEILING @ HEATER AREA.

GARAGE - WHERE GARAGE IS UNDER HABITABLE ROOMS 5/8" F.C. SHEET ROCK SHALL BE INSTALLED ON CEILING.

PROVIDE A MINIMUM 36" X 36" LEVEL PLATFORM AT EXTERIOR OF ALL EXIT DOORS MAXIMUM DISTANCE FROM LANDING TO DOOR THRESHOLD IS 7 3/4"

IN ADDITION TO DOORS AND PANELS SHOWN ON DRAWING PROVIDE ACCESS PANELS TO ALL ATTIC AREAS GREATER THAN 30" CLEAR HEIGHT AND AREAS THAT EXCEED 30 S.F. (MIN. ATTIC ACCESS PANEL 22" WIDE BY 30" HIGH)

AIR INFILTRATION AND MOISTURE CONTROL

AIR LEAKAGE FOR ALL BUILDINGS SHALL BE CONTROLLED AT OPENINGS IN THE EXTERIOR BUILDING ENVELOPE AS PER SECTION N1102.4.1 OF THE INTERNATIONAL RESIDENTIAL CODE 2015. CAULKING, GASKETING, WEATHERSTRIPPING, FOAMING OR OTHER SEALING IS REQUIRED TO LIMIT INFILTRATION AROUND: WINDOW AND DOOR FRAMES, SOLE PLATES AND STRUCTURAL FLOOR, FRAMING JOINTS; AROUND OPENINGS FOR PLUMBING, ELECTRICITY, TELEPHONE AND GAS LINES IN WALLS, FLOORS AND CEILINGS; AT MUDSILL IN CONDITIONED BASEMENTS OR CRAWLSPACES AND AT ALL OTHER OPENIGS IN EXTERIOR BUILDING ENVELOPE. ELECTRIC OUTLET PLATE GASKETS SHALL BE INSTALLED ON ALL RECEPTACLE, SWITCH OR OTHER ELECTRICAL BOXES IN EXTERIOR AND INTERIOR WALLS.

DWELLING UNIT SHALL BE TESTED AND VERIFIED AS HAVING AS AIR LEAKAGE RATE OF NOT EXCEEDING 3 AIR CHANGES PER HOUR. TESTING SHALL BE CONDUCTED WITH A BLOWER DOOR AT A PRESSURE OF 0.2 INCHES W.G. (50 PASCALS). TESTING AND VERIFICATION SHALL BE DONE BY A HERS RATER, HERS RATING FIELD INSPECTOR, AN APPLICABLE BPI CERTIFIED PROFESSIONAL, OR A BBRS APPROVED THIRD PARTY.

THE ENTIRE STRUCTURE SHALL BE WRAPPED WITH THE "TYVEK" INFILTRATION BARRIER TO FORM A CONTINUOUS BARRIER WITH MINIMUM 8" OVERLAPS AT JOINTS. TYVEK SHOULD COMPLETELY COVER ALL COMPONENT PARTS OF THE STRUCTURE, STAPLED TO SHEATHING AT 30" O.C. AND WRAPPED TO INSIDE OF DOOR AND WINDOW OPENINGS. SEE MANUFACTURERS INSTRUCTIONS FOR FURTHER INFORMATION. (OR INTERNATIONAL RESIDENTIAL CODE 2015, SECTION R702.7 AND INTERNATIONAL ENERGY CONSERVATION CODE 2015, SECTIONS R402.1.1 AND R402.4.1).

FELTS SHALL BE ORGANIC FIBER BASE SATURATED WITH BITUMEN WEIGHING 14-15 LBS. PER SQUARE. STRIPS OF FELT 8" WIDE SHALL BE INSTALLED AT HEADS AND JAMBS OF WINDOWS AND DOORS JUST PRIOR TO INSTALLATION OF EXTERIOR TRIM. USE ON ROOF OR SIDEWALLS NOT RECOMMENDED. PROVIDE ROOF UNDERLAYMENT AS REQUIRED BY SHINGLE MANUFACTURER.

FLASHING

A) GENERAL FLASHING SHALL BE ALUMINUM .019 INCHES THICK, DURANODIC BRONZE OR BROWN FINISH, UNLESS NOTED OTHERWISE.
B) ROOF FLASHING SHALL BE ALUMINUM .019 INCHES WITH DURANODIC BRONZE TONE OR BROWN FINISH AND USED WHEREVER FLASHING WILL BE EXPOSED SUCH AS AT VALLEYS, SIDEWALL CAPS AND BASES AND THE LIKE.
C) CHIMNEY CAP AND BASE FLASHING SHALL BE 3 LB. HARD LEAD.
D) VENT AND PIPE FLASHINGS SHALL BE OF PREFORMED NEOPRENE AS MANUFACTURED BY DUPONT, DOW CHEMICAL OR EQUAL. FLASHING SHALL CONSIST OF FABRICATED FLANGE AND CAP FLASHING.
E) STEP FLASHING: BASE FLASHING SHALL EXTEND ONTO ROOF AND UP THE SURFACE OF THE ADJOINING CONSTRUCTION A MINIMUM OF 4". THE UPPER EDGE OF THE BASE FLASHING SHALL EXTEND A MINIMUM OF 2" ABOVE THE NEXT COURSE OF SHINGLES AND THE LOWER EDGE SHALL BE 1/2" ABOVE THE BUTTS OF THE SHINGLE COVERING IT; PROVIDING A MINIMUM OF 1 1/2" OVERLAP OF FLASHING COURSES. CAP FLASHING SHALL EXTEND DOWN OVER BASE FLASHING A MINIMUM OF 4". THE STEPS IN CAP FLASHING SHOULD NOT EXCEED 8" AND LAPS SHALL BE A MINIMUM OF 3". ALL SEAMS SHALL OVERLAP IN DIRECTION OF FLOW.

PROVIDE ICE AND WATER SHIELD (W.R. GRACE OR EQUAL) MINIMUM OF 66" WIDE (2 COURSES LAPPED) AT ALL EAVES. USE ONE COURSE AT VALLEYS AND ROOF/WALL INTERSECTIONS. COVER ENTIRE ROOF AREA WHERE ROOF PITCH IS 4 IN 12 OR LESS.

PLEASE NOTE:

1. THESE GENERAL NOTES ARE PROVIDED TO EXPEDITE THE PRICING AND CONSTRUCTION OF THIS HOME. LOCAL BUILDING CODES AND SITE CONDITIONS MUST BE REVIEWED AND MATERIALS CHANGED OR AMENDED AS REQUIRED.
2. THE ARCHITECT CANNOT ACCEPT RESPONSIBILITY FOR SPECIFIC QUANTITIES OR QUALITIES LISTED HEREIN. IT IS THE RESPONSIBILITY OF THE BUILDER TO REVIEW THESE CONSTRUCTION DOCUMENTS AND CONFIRM THE SUITABILITY OF THIS HOUSE FOR A PARTICULAR BUILDING SITE. IN ADDITION TO THE ITEMS LISTED, THE OWNER SHOULD SELECT FINISH MATERIALS SUCH AS COLORS AND TYPES OF PAINTS, STAINS, TILE, CARPET, CABINETS, COUNTER TOPS AND LIGHT FIXTURES. ALSO TO BE CONSIDERED ARE THE HEATING/COOLING SYSTEM, WIRING, PLUMBING AND EXTERIOR SITEWORK.
3. CONTRACTOR SHALL VERIFY ALL CONDITIONS AND DIMENSIONS PRIOR TO BEGINNING WORK AND SHALL NOTIFY OWNER OF ANY DISCREPANCY. CONTRACTOR SHALL BE RESPONSIBLE FOR ANY VARIATIONS OR DEVIATIONS FROM THE PLANS WITHOUT WRITTEN CONFIRMATION FROM DESIGNER.
4. CONTRACTOR SHALL PROVIDE ADEQUATE BRACING OR OTHERWISE SUPPORT ALL PORTIONS OF THE STRUCTURE UNTIL ALL MEMBERS HAVE BEEN PERMANENTLY CONNECTED TOGETHER.
5. PLUMBING DIAGRAMS OR DRAWINGS SHALL BE PROVIDED BY THE PLUMBING CONTRACTOR.
6. HEATING/COOLING DUCT DIAGRAMS OR DRAWINGS SHALL BE PROVIDED BY THE HEATING/COOLING CONTRACTOR.
7. HEAT LOSS OR ENERGY USE CALCULATIONS SHALL BE PROVIDED BY HEATING/COOLING CONTRACTOR OR OTHER PROFESSIONAL AS REQUIRED BY BUILDING OFFICIAL.
8. TRUSS DESIGN, ENGINEERING AND PLANS SHALL BE PROVIDED BY TRUSS MANUFACTURER.
9. ALL EXHAUST FANS, RANGE HOODS AND DRYERS SHALL VENT TO THE OUTSIDE THROUGH SHEET METAL DUCTS. CAULK AROUND ALL PENETRATIONS THROUGH EXTERIOR ENVELOPE.
10. ALL WOOD IN PERMANENT CONTACT WITH CONCRETE OR SOIL SHALL BE PRESSURE TREATED WITH A WATER BORNE PRESERVATIVE.
11. ALL DOORS BETWEEN GARAGE AND LIVING AREAS SHALL BE 20 MINUTE FIRE RATED WITH SELF-CLOSING MECHANISMS.

© COPYRIGHT 2019 - M.Z.O. ARCHITECTURAL GROUP, INC. OWNS THE COPYRIGHT IN THIS DOCUMENT. NO REPRODUCTION OR OTHER USE IS ALLOWED WITHOUT THE EXPRESS WRITTEN CONSENT OF M.Z.O. ARCHITECTURAL GROUP, INC.

The MZO GROUP
DESIGNERS ■ ARCHITECTS ■ PLANNERS
IN THE MAQUELLE TRADITION
335 Main Street, Suite 201 ■ Stoneham, Massachusetts 02180
Voice: 781-279-4446 ■ Fax: 781-279-4448 E-Mail: mzo@mzogroup.com ■ www.mzogroup.com

Cape Club Estates
Sharon, MA

General Notes
SCALE: No Scale

Date / Drawn by
02/12/19
Date/Revised by

JOB NO. 5916

G-1